# SPIS TREŚCI
# CONTENTS


5 **Opis systemu kodów**
Coding system description

6 **Normy**
Norms standards

7 **Tuleje redukcyjne do narzędzi z chwytem Morse'a**
Reducing Adapters for tools with Morse Taper Shanks

8 **Tuleje redukcyjne do narzędzi z chwytem Morse'a z płetwą wg DIN 228-B**
Reducing Adapters for tools with Morse Taper Shank with Tang DIN 228-B

9 **Tuleje redukcyjne do narzędzi z chwytem Morse'a z gwintem wg DIN 228-A**
Reducing Adapters for tools with Morse Taper shank with drawbar mountings DIN 228-A

10 **Tuleje redukcyjne**
Reducing Adapters

11 **Trzpienie zabierakowe**
Shell Mill Adapters

12 **Trzpienie frezarskie uniwersalne krótkie do frezów z rowkiem wpustowym lub rowkiem zabierakowym DIN 138**
Combination Shell Mill Adapters for cutters with keyway or driving slot DIN 138

13 **Trzpienie frezarskie do głowic frezarskich**
Adapters for indexable face milling cutters

14 **Trzpień z uchwytem wiertarskim bezkluczykowym**
CNC – Integral shank precision keyless drill chucks

15 **Trzpienie frezarskie do uchwytów wiertarskich ze stożkiem DIN 238**
Drill Chuck Adapters for drill chucks with B taper DIN 238

16 **Oprawki zaciskowe do narzędzi z chwytem walcowym Weldona DIN 1835-B**
End mill adapters with weldon shank DIN 1835-B

19 **Oprawki zaciskowe do tulejek ER DIN 6499 do narzędzi z uchwytem walcowym**
Collet chucks for ER collets DIN 6499 for tools with cylindrical shank

20 **Oprawki zaciskowe przedłużone do tulejek ER DIN 6499 do narzędzi z uchwytem walcowym**
Collet Chucks ER - long for collets ER DIN 6499 for tools with cylindrical shank

21 **Tulejki zaciskowe ER , EO, PTEz50 oraz komplety tulejek ER**
Collets ER, EO, PTEz50 , sets of collets

22 **Komplety tulejek zaciskowych z trzpieniem w kasecie drewnianej**
Sets of Collets with collet chuck and wrench type in wooden case

23 **Oprawki zaciskowe do tulejek ER DIN 6499 do narzędzi z uchwytem walcowym**
Collet Chucks for ER collets DIN 6499 with cylindrical shank

24 **Tulejki zaciskowe PTEz50 Typ 7611**
Collets PTEz50 Type 7611

24 **Oprawki zaciskowe do tulejek PTEz50 do narzędzi z chwytem walcowym**
Collets Chucks for collets PTEz50 for tools with cylindrical shank

24 **Komplety tulejek zaciskowych PTEz-50 z trzpieniem w kasecie drewnianej**
Sets of Collets PTEz-50 with adapter and wrench type in wooden case

25 **Trzpienie frezarskie z rowkiem wpustowym i rowkiem zabierakowym DIN 138**
Shell Mill Adapters for cutters with keyway or driving slot DIN 138

25 **Trzpienie do frezów z otworem gwintowym NFE 62-516**
Morse taper arbors with threaded end NFE 62-516

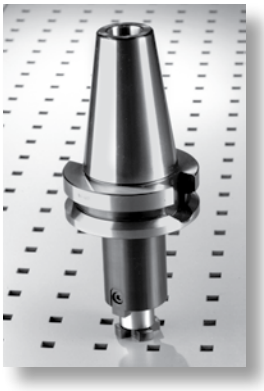

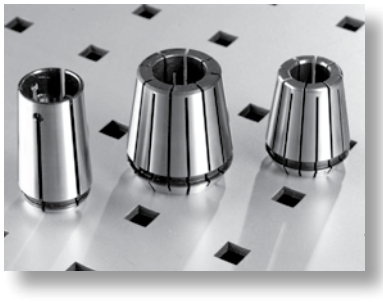

26 **Tuleje redukcyjne proste z nakrętką ściagajacą**
Morse sleeves with ejecting nut
26 **Trzpienie do uchwytów wiertarskich ze stożkiem DIN 238**
Drill chuck adapters DIN 238
27 **Podstawki montażowe**
Tightening fixtures
28 **Kły tokarskie**
Live Centers for lathes
29 **Oprawki pływające do rozwiertaków z przepływem chłodziwa**
Coolant thru floating reamer holder
29 **Oprawki kompensacyjne do gwintowania**
Floating tap holder with ER-M collets/length compensation on tension only
30 **Końcówki ściągające**
Pull studs
31 **Ustawiaki frezarskie/**Milling setters
31 **Akcesoria , części zamienne**
Akcesories, Spare parts
32 **Oprawki nozowe krótkie**
Radial- toolholders short
34 **Oprawki nożowe wzdłużne**
Axial – toolholders
36 **Oprawki mocujące do tulejek według DN 6499**
Toolholders for collets ER acc.DIN 6499
36 **Oprawki mocujace do narzędzi z chwytem Morse"a wg DIN 228A i 228B**
Toolholders for Morse taper shanks acc. to DIN 228A and 228B
37 **Oprawki do narzedzi cylindrycznych**
Toolholders for "U" drill
39 **Oprawki do listwy nożowej i oprawki z uchwytem wiertarskim**
Radial cut of toolholders and drill chuck toolholders
40 **Redukcje/**Reduktion sleeves
42 **Oprawka do termowiercenia/**Formdrill tool holder
42 **Oprawka do tulejek ER32 - „Shorty"**
Stubby Collet Chuck ER32
43 **Oprawki napędzane VDI DIN69880**
VDI Driven Toolholders
44 **3 i 4-ro szczękowe, uniwersalne uchwyty samocentrujące, spiralne**
z korpusem żeliwnym, szczęki jednolite mocowanie płaskie, DIN 6350
3 & 4-jaw, self- centering scroll chucks with cast iron body and solid jaws, flat mounting
46 **3-szczękowe, uniwersalne uchwyty tokarskie z korpusem stalowym kutym, mocowanie płaskie DIN 6350**
3-jaw, self-centering scroll chucks with steel body, flat mouting
48 **Zabieraki tokarskie**/Chuck back plates
48 **4-szczękowe uchwyty tokarskie z niezależnym nastawieniem szczęk z korpusem żeliwnym o podwyższonej dokładności,**
4-jaw, independent chucks with cast iron body and higher accurancy

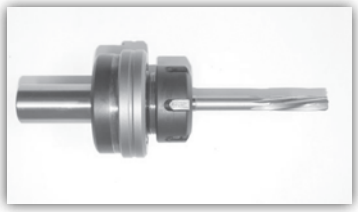

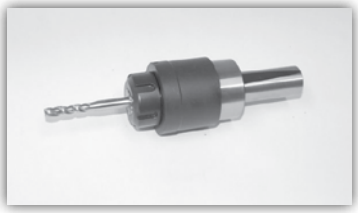

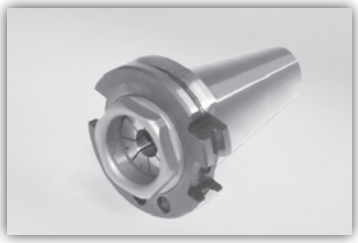

**1. Uwagi ogólne:**
Wybrane produkty mogą być wykonane dla różnych standardów przepłukiwania przez wrzeciono: A, AD, AD+B.
Dopuszczalna prędkość obrotowa dla wykonania standardowego wynosi 10.000 obr./min.
Na życzenie możliwe jest wyważenie produktów do prędkości obrotowych do 20.000 obr./min.

**2. Zasady posługiwania się systemem kodowym, użytym w niniejszym katalogu.**
Kod danego wyrobu składa się z trzech członów, których znaczenie przedstawiono poniżej.

I II III
/————/./————/./————/

I. Oznacza typ i wielkość stożka mocującego trzpień w gnieździe obrabiarki.
1. Występują trzy rodzaje stożków w zależności od normy.
**A/** typ oznaczony jako **ISO** norma **DIN-2080**
**B/** typ oznaczony jako **DIN** norma **DIN-69871**
**C/** typ oznaczony jako **BT** norma **MAS 403 BT**
2. Stożki mocujące uszeregowane są także według wielkości i tak występują trzy podstawowe wielkości oznaczone kodem **30**, **40** i **50**.
Przykładowe oznaczenie stożka to **ISO40**.

II. Oznacza długość części mocującej danego trzpienia tj. odległość pomiędzy wymiarem nominalnym stożka, a płaszczyzną bazową mocowanego narzędzia,
np. **A100** oznacza, że część mocująca trzpienia wystaje 100 mm z wrzeciona obrabiarki.

III. Oznacza przeznaczenie danego trzpienia tj. do mocowania jakiego narzędzia przeznaczony jest dany trzpień. Stosuje się tu oznaczenie literowo-cyfrowe, np. **MK3P** oznacza gniazdo Morse'a 3 z płetwą.
Inne użyte skróty rodzaju części mocującej w zależności od przeznaczenia znajdują się na każdej stronie katalogu.

Przykłady:

| | | |
|---|---|---|
| **ER** | – | do tulejek zaciskowych typu ER |
| **WE** | – | typ WELDON + rozmiar otworu np. WE20 |
| **B12** | – | do uchwytu wiertarskiego np. B12 |
| **MK (1-5)** | – | redukcja na Morse'a |
| **D16C** | – | do głowicy frezarskiej Δ 16 ze sprzęgłem (C) |
| **D16S** | – | do głowicy frezarskiej Δ 16 z kamieniami zabierakowymi (S) |
| **FV** | – | do narzędzi ze śrubą mocującą |
| **P** | – | do narzędzi z płetwą |

Przykładowe pełne oznaczenie trzpienia:
**BT40.A37.WE20** oznacza

I. Trzpień o stożku 7:24 według normy MAS-BT o rozmiarze 40.
II. Długość części chwytowej wynosi 37 mm.
III. Część chwytowa typu WELDON o otworze mocującym 20 mm.

**1. General remarks:**
The selected adapters can be executed in different selections of the coolant thru systems: A, AD, AD+B.
The approved spindle speed for standard products is 10.000 rev/min; on request they can be balanced up to 20.000 rev/min.

**2. Description of the coding system used in this catalogue**
Code of product described in this catalogue consists of three sections, which meaning is explained below.

I II III
/————/./————/./————/

I. Describes type and size of the taper.
1. There are three types of tapers according to the different norms:
**A/** type described as **ISO** – as per norm standard **DIN-2080**
**B/** type described as **DIN** – as per norm standard **DIN-69871**
**C/** type described as **BT**– as per norm standard **MAS 403 BT**
2. Tapers are diversified also by size; and there are three basic sizes described with the numbers: **30**, **40** and **50**.
Example: **ISO40**.

II. Describes the length of the dominant dimension in defined type of the adapter. In majority of cases it is the dimension from the nominal surface of the taper and the basic surface of the mounted tool.

III. Describes the destination of the defined adapter; means to which tool it is dedicated. We are using here the numerical-letter's description. For example: **MK3P** means adapter for Morse's 3 with tang.
Other abbreviations used for description of each type are on the further pages.

Examples:

| | | |
|---|---|---|
| **ER** | – | for collets' chucks type ER |
| **WE** | – | type WELDON + size of the hole; for example: WE20 |
| **B12** | – | for drill's chuck for ex. B12 |
| **MK (1-5)** | – | reduction for Morse |
| **D16C** | – | for indexable milling cutters Δ 16 with clutch (C) |
| **D16S** | – | for indexable milling cutters Δ 16 with driving slot (S) |
| **FV** | – | for the tools with mounting screw |
| **P** | – | for the tools with tang |

Example of the full description of the adapter:
**BT40.A37.WE20** means:

I. Taper 7:24 according to the norm MAS-BT, size 40.
II. Length of the chucking part is 37 mm.
III. Chucking part type WELDON with the hole 20 mm.

Charakterystyka techniczna wyrobów:
– materiał: stal stopowa chromowo-manganowa
– nawęglane na głębokość 0,7 mm
– hartowane i precyzyjnie szlifowane
– twardość powierzchni 58 ± 2 HRC
– tolerancja kątowa stożka AT3

Technical characteristics of products:
– Manufactured of chrome-manganese steel.
– Carbureted up to 0,7 mm depth.
– Hardened and precision ground.
– Surface hardnes HRC 58 ± 2
– Taper angle tolerance AT3

## DIN 2080

chwyt ze stożkiem 7:24
tool shank with taper 7:24

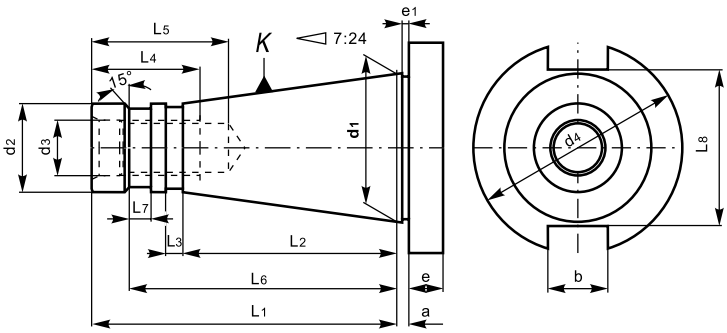


| 7:24 | a±0,2 | bH12 | d1 | d2 | d3 | d4 | e | e1 | L1 | L2 | L3 | L4 | L5 | L6 | L7 | L8 |
|---|---|---|---|---|---|---|---|---|---|---|---|---|---|---|---|---|
| **30** | 1,6 | 16,1 | 31,75 | 17,4 | M12 | 50,0 | 8 | 1,6 | 68,4 | 48,4 | 3 | 24 | 33,5 | – | – | 32,4 |
| **40** | 1,6 | 16,1 | 44,45 | 25,3 | M16 | 63,0 | 10 | 1,6 | 93,4 | 65,4 | 5 | 30 | 42,5 | 82 | 7,0 | 45,0 |
| **50** | 3,2 | 25,7 | 69,85 | 39,6 | M24 | 97,5 | 12 | 3,2 | 126,8 | – | – | 45 | 61,5 | 115 | 13,3 | 70,6 |

## DIN 69871-A

chwyt ze stożkiem 7:24 do wymiany automatycznej
tool shank with taper 7:24 for automatic tool change

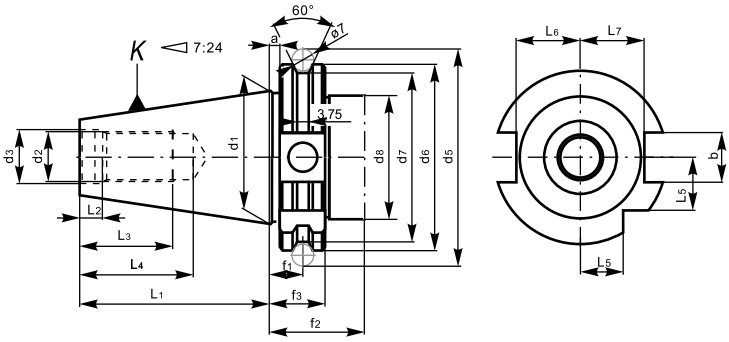


| 7:24 | a | bH12 | d1 | d2 | d3 | d5 | d6 | d7 | d8max | f1 | f2 | f3 | L1 | L2 | L3 | L4 | L5 | L6 | L7 |
|---|---|---|---|---|---|---|---|---|---|---|---|---|---|---|---|---|---|---|---|
| **30** | 3,2 | 16,1 | 31,75 | M12 | 13 | 59,30 | 50,00 | 44,30 | 45 | 11,1 | 35 | 19,1 | 47,80 | 5,5 | 24 | 33,5 | 15 | 16,4 | 19 |
| **40** | 3,2 | 16,1 | 44,45 | M16 | 17 | 72,30 | 63,55 | 56,25 | 50 | 11,1 | 35 | 19,1 | 68,40 | 8,2 | 32 | 42,5 | 18,5 | 22,8 | 25 |
| **50** | 3,2 | 25,7 | 69,85 | M24 | 25 | 107,25 | 97,50 | 91,25 | 80 | 11,1 | 35 | 19,1 | 101,75 | 11,5 | 47 | 61,5 | 30 | 35,5 | 37,7 |

## MAS 403-BT

chwyt ze stożkiem 7:24 do wymiany automatycznej
tool shank with taper 7:24 for automatic tool change

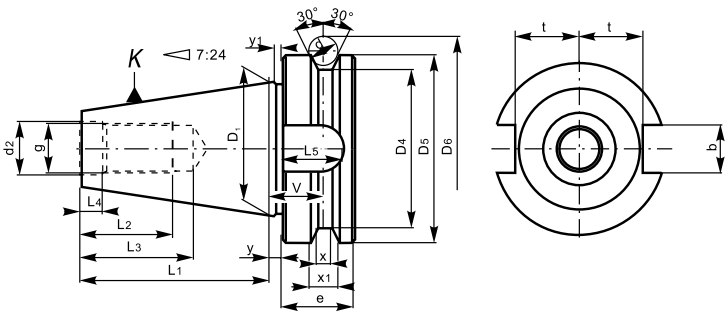


| 7:24 | D1 | L1 | d2 | g | L2 | L3 | L4 | bH12 | L5 | t | D4 | D5 | e | v | x | x1 | y | y1 |
|---|---|---|---|---|---|---|---|---|---|---|---|---|---|---|---|---|---|---|
| 30 | 31,75 | 48,4 | 12,5 | M12 | 24 | 34 | 7 | 16,1 | 17 | 16,3 | 38 | 46 | 20 | 13,6 | 4 | 8 | 2 | 2 |
| 40 | 44,45 | 65,4 | 17,9 | M16 | 30 | 43 | 9 | 16,1 | 21 | 22,6 | 53 | 63 | 25 | 16,6 | 5 | 10 | 2 | 2 |
| 50 | 69,85 | 101,8 | 25,0 | M24 | 45 | 62 | 13 | 25,7 | 31 | 35,4 | 85 | 100 | 35 | 23,2 | 7 | 15 | 3 | 3 |

## DIN 2080

### TYP/TYPE ISO-FV — 1655

| K 7:24 | $K_1$ Morse | A | Rys. | Waga/Weight kg | Kod/Code |
|---|---|---|---|---|---|
| 30 | 2 | 18 | 1 | 0,57 | ISO30.A18.MK2FV |
| 30 | 3 | 72 | 1 | 0,46 | ISO30.A72.MK3FV |
| 40 | 1 | 14 | 2 | 0,62 | ISO40.A14.MK1FV |
| 40 | 2 | 14 | 1 | 0,59 | ISO40.A14.MK2FV |
| 40 | 3 | 14 | 1 | 0,52 | ISO40.A14.MK3FV |
| 40 | 4 | 43 | 1 | 0,57 | ISO40.A43.MK4FV |
| 40 | 4 | 67 | 1 | 0,85 | ISO40.A67.MK4FV |
| 50 | 1 | 17 | 2 | 2,70 | ISO50.A17.MK1FV |
| 50 | 2 | 21 | 1 | 2,52 | ISO50.A21.MK2FV |
| 50 | 3 | 21 | 1 | 2,40 | ISO50.A21.MK3FV |
| 50 | 4 | 21 | 1 | 2,15 | ISO50.A21.MK4FV |
| 50 | 5 | 65 | 1 | 2,65 | ISO50.A65.MK5FV |

Rys. 1

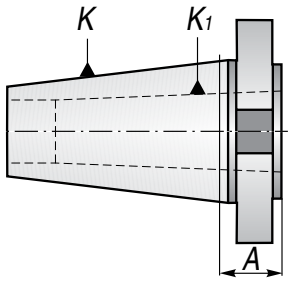


Rys. 2

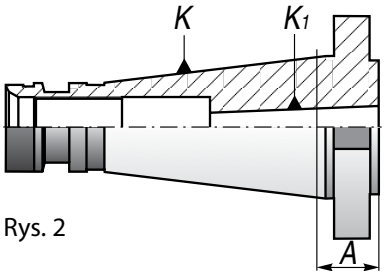


## DIN 69871-A

### TYP/TYPE DIN-FV — 1682

| K 7:24 | $K_1$ Morse | A | M | Rys. | Waga/Weight kg | Kod/Code |
|---|---|---|---|---|---|---|
| 40 | 1 | 45 | M16 | 1 | 0,90 | DIN40.A45.MK1FV |
| 40 | 2 | 60 | M16 | 1 | 1,00 | DIN40.A60.MK2FV |
| 40 | 3 | 75 | – | 2 | 1,10 | DIN40.A75.MK3FV |
| 40 | 4 | 85 | – | 2 | 1,50 | DIN40.A85.MK4FV |
| 50 | 1 | 45 | M24 | 1 | 3,00 | DIN50.A45.MK1FV |
| 50 | 2 | 45 | M24 | 1 | 2,80 | DIN50.A45.MK2FV |
| 50 | 3 | 60 | M24 | 1 | 3,20 | DIN50.A60.MK3FV |
| 50 | 4 | 75 | M24 | 1 | 3,20 | DIN50.A75.MK4FV |
| 50 | 5 | 75 | – | 2 | 3,00 | DIN50.A75.MK5FV |

Rys. 1

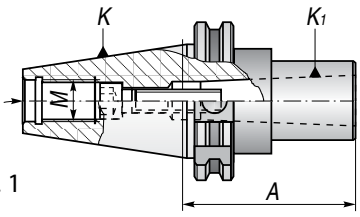


Rys. 2

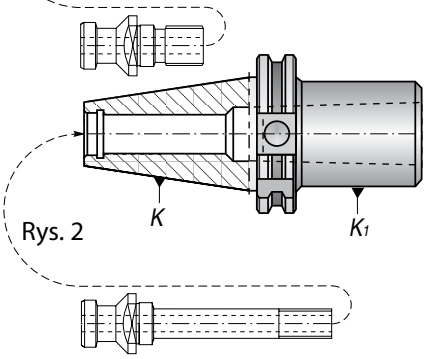


## MAS 403-BT

### TYP/TYPE BT-FV — 1663

| K 7:24 | $K_1$ Morse | A | M | Rys. | Waga/Weight kg | Kod/Code |
|---|---|---|---|---|---|---|
| 30 | 1 | 45 | M12 | 1 | 0,30 | BT30.A45.MK1FV |
| 30 | 2 | 60 | – | 2 | 0,40 | BT30.A60.MK2FV |
| 40 | 1 | 45 | M16 | 1 | 0,90 | BT40.A45.MK1FV |
| 40 | 2 | 60 | M16 | 1 | 1,20 | BT40.A60.MK2FV |
| 40 | 3 | 75 | – | 2 | 1,00 | BT40.A75.MK3FV |
| 40 | 4 | 85 | – | 2 | 1,50 | BT40.A85.MK4FV |
| 50 | 1 | 45 | M24 | 1 | 3,00 | BT50.A45.MK1FV |
| 50 | 2 | 45 | M24 | 1 | 3,00 | BT50.A45.MK2FV |
| 50 | 3 | 60 | M24 | 1 | 3,10 | BT50.A60.MK3FV |
| 50 | 4 | 75 | M24 | 1 | 3,10 | BT50.A75.MK4FV |
| 50 | 5 | 75 | – | 2 | 3,00 | BT50.A75.MK5FV |

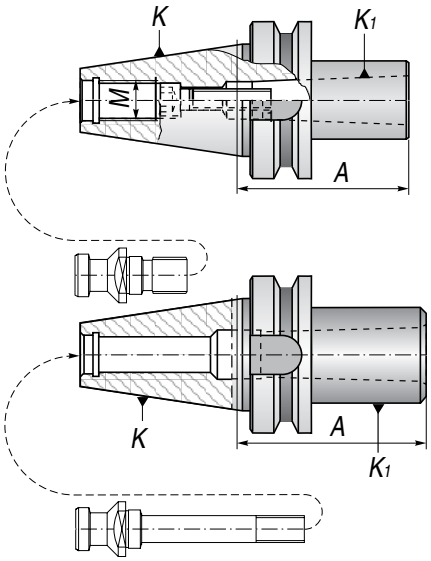

## DIN 2080

### TYP/TYPE ISO-MKP 1679

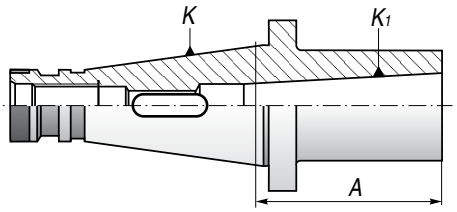


| KK1 7:24 | Morse | A | Waga/Weight kg | Kod/Code |
|---|---|---|---|---|
| 30 | 1 | 50 | 0,35 | ISO30.A50.MK1P |
| 30 | 2 | 50 | 0,40 | ISO30.A50.MK2P |
| 30 | 3 | 72 | 0,60 | ISO30.A72.MK3P |
| 40 | 1 | 50 | 0,90 | ISO40.A50.MK1P |
| 40 | 2 | 50 | 0,90 | ISO40.A50.MK2P |
| 40 | 3 | 65 | 1,00 | ISO40.A65.MK3P |
| 40 | 4 | 95 | 1,50 | ISO40.A95.MK4P |
| 50 | 1 | 45 | 3,00 | ISO50.A45.MK1P |
| 50 | 2 | 60 | 3,00 | ISO50.A60.MK2P |
| 50 | 3 | 65 | 3,20 | ISO50.A65.MK3P |
| 50 | 4 | 70 | 3,20 | ISO50.A70.MK4P |
| 50 | 5 | 105 | 3,20 | ISO50.A105.MK5P |

| K 7:24 | K1 Morse | A | Waga/Weight kg | Kod/Code |
|---|---|---|---|---|
| 40 | 1 | 92 | 1,10 | ISO40.A92.MK1P |
| 40 | 2 | 109 | 1,25 | ISO40.A109.MK2P |
| 40 | 3 | 129 | 1,50 | ISO40.A129.MK3P |
| 40 | 4 | 152 | 2,25 | ISO40.A152.MK4P |
| 50 | 1 | 96 | 3,30 | ISO50.A96.MK1P |
| 50 | 2 | 113 | 3,30 | ISO50.A113.MK2P |
| 50 | 3 | 133 | 3,45 | ISO50.A133.MK3P |
| 50 | 4 | 163 | 3,70 | ISO50.A163.MK4P |
| 50 | 5 | 193 | 3,70 | ISO50.A193.MK5P |

## DIN 69871-A

### TYP/TYPE DIN-MKP 1681

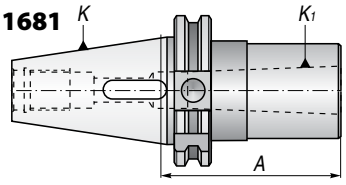


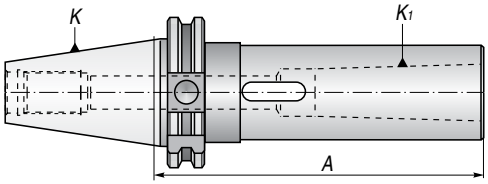


| K 7:24 | K1 Morse | A | Waga/Weight kg | Kod/Code |
|---|---|---|---|---|
| 30 | 1 | 50 | 0,30 | DIN30.A50.MK1P |
| 30 | 2 | 60 | 0,40 | DIN30.A60.MK2P |
| 30 | 3 | 80 | 0,60 | DIN30.A80.MK3P |
| 40 | 1 | 50 | 0,90 | DIN40.A50.MK1P |
| 40 | 2 | 50 | 0,90 | DIN40.A50.MK2P |
| 40 | 3 | 70 | 1,00 | DIN40.A70.MK3P |
| 40 | 4 | 95 | 1,50 | DIN40.A95.MK4P |
| 50 | 1 | 45 | 3,00 | DIN50.A45.MK1P |
| 50 | 2 | 60 | 3,00 | DIN50.A60.MK2P |
| 50 | 3 | 65 | 3,20 | DIN50.A65.MK3P |
| 50 | 4 | 95 | 3,50 | DIN50.A95.MK4P |
| 50 | 5 | 105 | 3,50 | DIN50.A105.MK5P |

| K 7:24 | K1 Morse | A | Waga/Weight kg | Kod/Code |
|---|---|---|---|---|
| 40 | 1 | 120 | 1,30 | DIN40.A120.MK1P |
| 40 | 2 | 120 | 1,30 | DIN40.A120.MK2P |
| 40 | 3 | 135 | 2,00 | DIN40.A135.MK3P |
| 40 | 4 | 165 | 2,30 | DIN40.A165.MK4P |
| 50 | 1 | 120 | 3,50 | DIN50.A120.MK1P |
| 50 | 2 | 135 | 3,50 | DIN50.A135.MK2P |
| 50 | 3 | 155 | 3,50 | DIN50.A155.MK3P |
| 50 | 4 | 180 | 3,80 | DIN50.A180.MK4P |
| 50 | 5 | 215 | 3,90 | DIN50.A215.MK5P |

## MAS 403-BT

### TYP/TYPE BT-MKP 1661

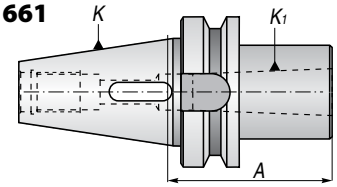


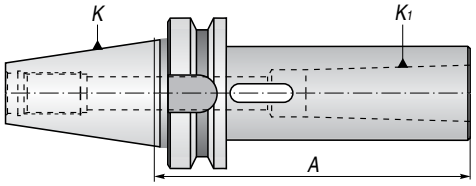


| K 7:24 | K1 Morse | A | Waga/Weight kg | Kod/Code |
|---|---|---|---|---|
| 30 | 1 | 50 | 0,30 | BT30.A50.MK1P |
| 30 | 2 | 60 | 0,40 | BT30.A60.MK2P |
| 30 | 3 | 79 | 0,60 | BT30.A79.MK3P |
| 40 | 1 | 50 | 0,90 | BT40.A50.MK1P |
| 40 | 2 | 50 | 1,20 | BT40.A50.MK2P |
| 40 | 3 | 70 | 1,00 | BT40.A70.MK3P |
| 40 | 4 | 95 | 1,50 | BT40.A95.MK4P |
| 50 | 1 | 45 | 3,00 | BT50.A45.MK1P |
| 50 | 2 | 60 | 3,00 | BT50.A60.MK2P |
| 50 | 3 | 65 | 3,20 | BT50.A65.MK3P |
| 50 | 4 | 95 | 3,30 | BT50.A95.MK4P |
| 50 | 5 | 105 | 3,20 | BT50.A105.MK5P |

| K 7:24 | K1 Morse | A | Waga/Weight kg | Kod/Code |
|---|---|---|---|---|
| 40 | 1 | 120 | 1,30 | BT40.A120.MK1P |
| 40 | 2 | 120 | 1,40 | BT40.A120.MK2P |
| 40 | 3 | 135 | 2,00 | BT40.A135.MK3P |
| 40 | 4 | 165 | 2,30 | BT40.A165.MK4P |
| 50 | 1 | 120 | 3,50 | BT50.A120.MK1P |
| 50 | 2 | 135 | 3,50 | BT50.A135.MK2P |
| 50 | 3 | 155 | 3,50 | BT50.A155.MK3P |
| 50 | 4 | 180 | 3,80 | BT50.A180.MK4P |
| 50 | 5 | 215 | 3,90 | BT50.A215.MK5P |

DIN 2080

## TYP/TYPE ISO-MKS 1676

| K 7:24 | $K_1$ Morse | A | Rys. | Waga/Weight kg | Kod/Code |
|---|---|---|---|---|---|
| 30 | 1 | 50 | 1 | 0,45 | ISO30.A50.MK1S |
| 30 | 2 | 50 | 2 | 0,48 | ISO30.A50.MK2S |
| 30 | 3 | 78 | 2 | 0,68 | ISO30.A78.MK3S |
| 40 | 1 | 50 | 1 | 0,90 | ISO40.A50.MK1S |
| 40 | 2 | 50 | 1 | 0,90 | ISO40.A50.MK2S |
| 40 | 3 | 65 | 2 | 1,10 | ISO40.A65.MK3S |
| 40 | 4 | 95 | 2 | 1,50 | ISO40.A95.MK4S |
| 50 | 1 | 45 | 1 | 3,00 | ISO50.A45.MK1S |
| 50 | 2 | 45 | 1 | 3,00 | ISO50.A45.MK2S |
| 50 | 3 | 60 | 1 | 3,20 | ISO50.A60.MK3S |
| 50 | 4 | 65 | 1 | 3,40 | ISO50.A65.MK4S |
| 50 | 5 | 120 | 2 | 3,60 | ISO50.A120.MK5S |

Rys. 1

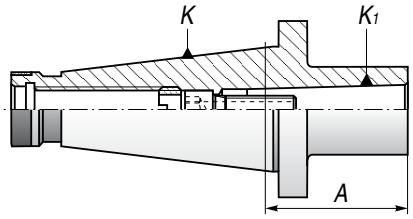


Rys. 2

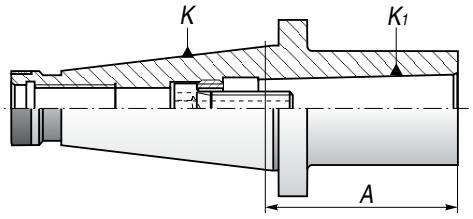


DIN 69871-A

## TYP/TYPE DIN-MKS 1695

| K 7:24 | $K_1$ Morse | A | Rys. | Waga/Weight kg | Kod/Code |
|---|---|---|---|---|---|
| 30 | 1 | 50 | 1 | 0,44 | DIN30.A50.MK1S |
| 30 | 2 | 60 | 2 | 0,53 | DIN30.A60.MK2S |
| 30 | 3 | 85 | 2 | 0,74 | DIN30.A85.MK3S |
| 40 | 1 | 50 | 1 | 0,85 | DIN40.A50.MK1S |
| 40 | 2 | 50 | 1 | 0,85 | DIN40.A50.MK2S |
| 40 | 3 | 70 | 2 | 1,00 | DIN40.A70.MK3S |
| 40 | 4 | 95 | 2 | 1,40 | DIN40.A95.MK4S |
| 50 | 1 | 45 | 1 | 2,60 | DIN50.A45.MK1S |
| 50 | 2 | 60 | 1 | 2,65 | DIN50.A60.MK2S |
| 50 | 3 | 65 | 1 | 2,90 | DIN50.A65.MK3S |
| 50 | 4 | 95 | 1 | 3,00 | DIN50.A95.MK4S |
| 50 | 5 | 120 | 2 | 3,40 | DIN50.A120.MK5S |

Rys. 1

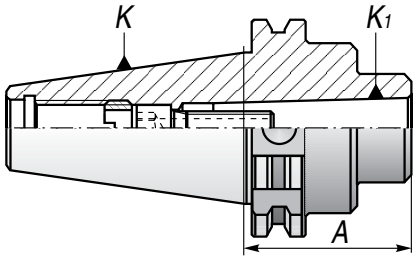


Rys. 2

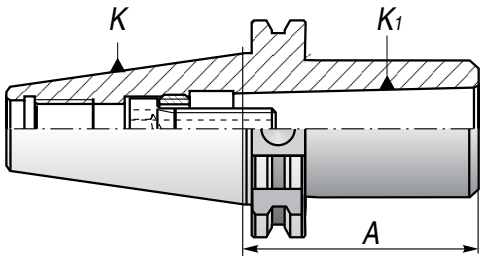


MAS 403-BT

## TYP/TYPE BT-MKS 1694

| K 7:24 | $K_1$ Morse | A | Rys. | Waga/Weight kg | Kod/Code |
|---|---|---|---|---|---|
| 30 | 1 | 50 | 1 | 0,45 | BT30.A50.MK1S |
| 30 | 2 | 60 | 2 | 0,54 | BT30.A60.MK2S |
| 30 | 3 | 80 | 2 | 0,75 | BT30.A80.MK3S |
| 40 | 1 | 50 | 1 | 0,60 | BT40.A50.MK1S |
| 40 | 2 | 50 | 1 | 0,65 | BT40.A50.MK2S |
| 40 | 3 | 70 | 2 | 1,00 | BT40.A70.MK3S |
| 40 | 4 | 95 | 2 | 1,40 | BT40.A95.MK4S |
| 50 | 1 | 45 | 1 | 2,80 | BT50.A45.MK1S |
| 50 | 2 | 60 | 1 | 2,95 | BT50.A60.MK2S |
| 50 | 3 | 65 | 1 | 3,00 | BT50.A65.MK3S |
| 50 | 4 | 90 | 1 | 3,10 | BT50.A90.MK4S |
| 50 | 5 | 120 | 2 | 3,40 | BT50.A120.MK5S |

Rys. 1

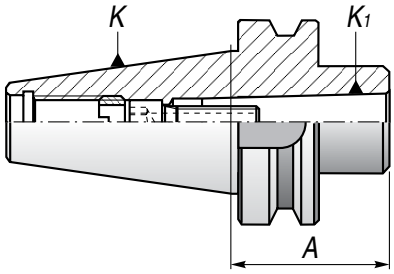


Rys. 2

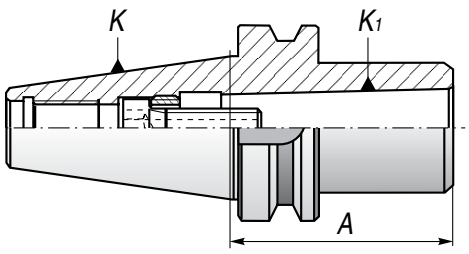

DIN 2080

## TYP/TYPE ISO-ISO 1699

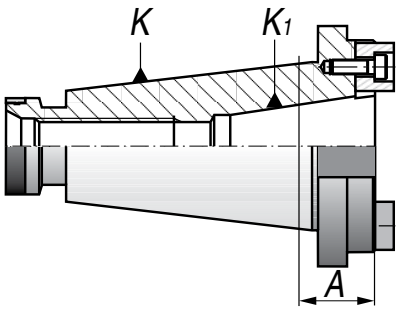


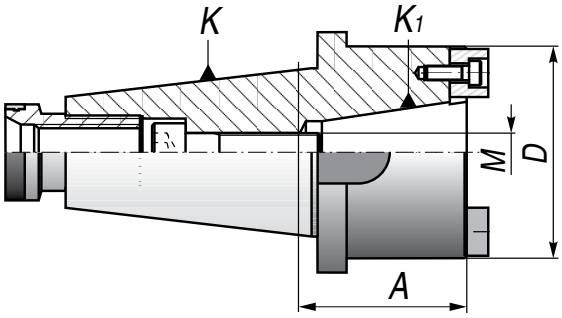


| K 7:24 | $K_1$ 7:24 | A | Rys. | D | M | Waga/Weight kg | Kod/Code |
|---|---|---|---|---|---|---|---|
| 50 | 40 | 27 | 1 | 88 | M16 | 2,20 | ISO50.A27.ISO40 |
| 50 | 40 | 65 | 2 | 88 | M16 | 2,70 | ISO50.A65.ISO40 |

DIN 69871-A

## TYP/TYPE DIN-ISO 1684

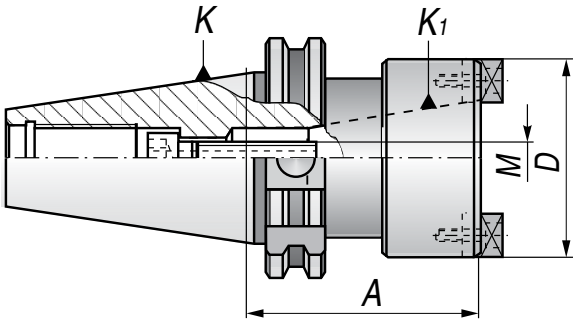


| K 7:24 | $K_1$ 7:24 | A | D | M | Waga/Weight kg | Kod/Code |
|---|---|---|---|---|---|---|
| 50 | 40 | 80 | 88 | M16 | 3,00 | DIN50.A80.ISO40 |

MAS 403-BT

## TYP/TYPE BT-ISO 1660

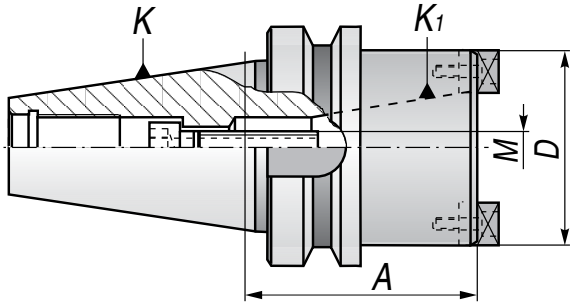


| K 7:24 | $K_1$ 7:24 | A | D | M | Waga/Weight kg | Kod/Code |
|---|---|---|---|---|---|---|
| 50 | 40 | 80 | 88 | M16 | 3,20 | BT50.A80.ISO40 |

## DIN 2080

### TYP/TYPE ISO-DS 7311

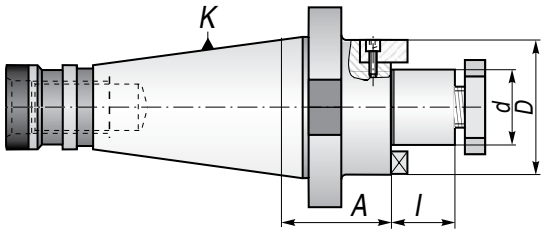


| 7:24 | d | A | l | D | Waga/Weight kg | Kod/Code |
|---|---|---|---|---|---|---|
| 30 | 16 | 35 | 17 | 32 | 0,50 | ISO30.A35.D16S |
| 30 | 22 | 35 | 19 | 40 | 0,58 | ISO30.A35.D22S |
| 30 | 27 | 35 | 21 | 48 | 0,63 | ISO30.A35.D27S |
| 30 | 32 | 35 | 24 | 58 | 0,78 | ISO30.A35.D32S |
| 40 | 16 | 37 | 17 | 32 | 0,95 | ISO40.A37.D16S |
| 40 | 22 | 37 | 19 | 40 | 1,00 | ISO40.A37.D22S |
| 40 | 27 | 37 | 21 | 48 | 1,15 | ISO40.A37.D27S |
| 40 | 32 | 37 | 24 | 58 | 1,28 | ISO40.A37.D32S |
| 40 | 40 | 37 | 27 | 70 | 1,85 | ISO40.A37.D40S |
| 50 | 22 | 40 | 19 | 40 | 3,00 | ISO50.A40.D22S |
| 50 | 27 | 40 | 21 | 48 | 3,25 | ISO50.A40.D27S |
| 50 | 32 | 40 | 24 | 58 | 3,40 | ISO50.A40.D32S |
| 50 | 40 | 40 | 27 | 70 | 3,60 | ISO50.A40.D40S |
| 50 | 50 | 40 | 30 | 90 | 3,95 | ISO50.A40.D50S |

| 7:24 | d | A | l | D | Waga/Weight kg | Kod/Code |
|---|---|---|---|---|---|---|
| 40 | 16 | 90 | 17 | 32 | 1,50 | ISO40.A90.D16S |
| 40 | 22 | 90 | 19 | 40 | 1,60 | ISO40.A90.D22S |
| 40 | 27 | 90 | 21 | 48 | 1,60 | ISO40.A90.D27S |
| 40 | 32 | 90 | 24 | 58 | 1,90 | ISO40.A90.D32S |
| 40 | 40 | 90 | 27 | 70 | 2,40 | ISO40.A90.D40S |
| 50 | 22 | 100 | 19 | 40 | 3,40 | ISO50.A100.D22S |
| 50 | 27 | 100 | 21 | 48 | 3,70 | ISO50.A100.D27S |
| 50 | 32 | 100 | 24 | 58 | 4,10 | ISO50.A100.D32S |
| 50 | 40 | 100 | 27 | 70 | 4,30 | ISO50.A100.D40S |
| 50 | 50 | 100 | 30 | 90 | 4,80 | ISO50.A100.D50S |

## DIN 69871-A

### TYP/TYPE DIN-DS 7369

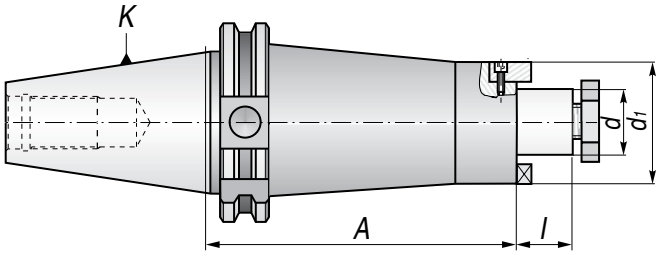


| 7:24 | d | A | l | D | Waga/Weight kg | Kod/Code |
|---|---|---|---|---|---|---|
| 30 | 16 | 35 | 17 | 32 | 0,50 | DIN30.A35.D16S |
| 30 | 22 | 35 | 19 | 40 | 0,58 | DIN30.A35.D22S |
| 30 | 27 | 35 | 21 | 48 | 0,63 | DIN30.A35.D27S |
| 30 | 32 | 35 | 24 | 58 | 0,78 | DIN30.A35.D32S |
| 40 | 16 | 60 | 17 | 32 | 1,10 | DIN40.A60.D16S |
| 40 | 22 | 60 | 19 | 40 | 1,20 | DIN40.A60.D22S |
| 40 | 27 | 60 | 21 | 48 | 1,40 | DIN40.A60.D27S |
| 40 | 32 | 60 | 24 | 58 | 1,50 | DIN40.A60.D32S |
| 40 | 40 | 60 | 27 | 70 | 1,90 | DIN40.A60.D40S |
| 50 | 16 | 60 | 17 | 32 | 2,80 | DIN50.A60.D16S |
| 50 | 22 | 60 | 19 | 40 | 3,00 | DIN50.A60.D22S |
| 50 | 27 | 60 | 21 | 48 | 3,25 | DIN50.A60.D27S |
| 50 | 32 | 60 | 24 | 58 | 3,40 | DIN50.A60.D32S |
| 50 | 40 | 60 | 27 | 70 | 3,60 | DIN50.A60.D40S |
| 50 | 50 | 60 | 30 | 90 | 4,00 | DIN50.A60.D50S |

| 7:24 | d | A | l | D | Waga/Weight kg | Kod/Code |
|---|---|---|---|---|---|---|
| 40 | 16 | 120 | 17 | 32 | 1,70 | DIN40.A120.D16S |
| 40 | 22 | 120 | 19 | 40 | 1,90 | DIN40.A120.D22S |
| 40 | 27 | 120 | 21 | 48 | 2,20 | DIN40.A120.D27S |
| 40 | 32 | 120 | 24 | 58 | 2,40 | DIN40.A120.D32S |
| 50 | 16 | 110 | 17 | 32 | 3,15 | DIN50.A110.D16S |
| 50 | 22 | 110 | 19 | 40 | 3,40 | DIN50.A110.D22S |
| 50 | 27 | 110 | 21 | 48 | 3,70 | DIN50.A110.D27S |
| 50 | 32 | 110 | 24 | 58 | 4,10 | DIN50.A110.D32S |
| 50 | 40 | 110 | 27 | 70 | 4,30 | DIN50.A110.D40S |

## MAS 403-BT

### TYP/TYPE BT-DS 7388

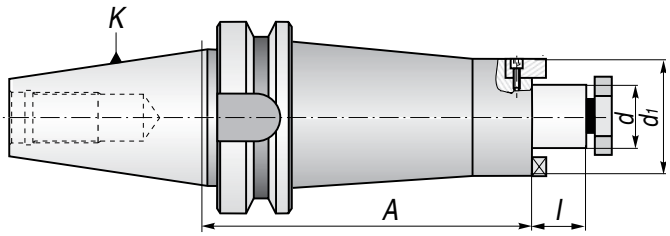


| 7:24 | d | A | l | D | Waga/Weight kg | Kod/Code |
|---|---|---|---|---|---|---|
| 30 | 16 | 43 | 17 | 32 | 0,50 | BT30.A43.D16S |
| 30 | 22 | 43 | 19 | 40 | 0,58 | BT30.A43.D22S |
| 30 | 27 | 43 | 21 | 48 | 0,63 | BT30.A43.D27S |
| 30 | 32 | 43 | 24 | 58 | 0,78 | BT30.A43.D32S |
| 40 | 16 | 52 | 17 | 32 | 1,10 | BT40.A52.D16S |
| 40 | 22 | 52 | 19 | 40 | 1,20 | BT40.A52.D22S |
| 40 | 27 | 52 | 21 | 48 | 1,40 | BT40.A52.D27S |
| 40 | 32 | 52 | 24 | 58 | 1,50 | BT40.A52.D32S |
| 40 | 40 | 60 | 27 | 70 | 1,90 | BT40.A60.D40S |
| 50 | 16 | 65 | 17 | 32 | 2,80 | BT50.A65.D16S |
| 50 | 22 | 65 | 19 | 40 | 3,00 | BT50.A65.D22S |
| 50 | 27 | 65 | 21 | 48 | 3,25 | BT50.A65.D27S |
| 50 | 32 | 65 | 24 | 58 | 3,40 | BT50.A65.D32S |
| 50 | 40 | 78 | 27 | 70 | 3,60 | BT50.A78.D40S |
| 50 | 50 | 78 | 30 | 90 | 4,00 | BT50.A78.D50S |

| 7:24 | d | A | l | D | Waga/Weight kg | Kod/Code |
|---|---|---|---|---|---|---|
| 40 | 16 | 120 | 17 | 32 | 1,70 | BT40.A120.D16S |
| 40 | 22 | 120 | 19 | 40 | 1,90 | BT40.A120.D22S |
| 40 | 27 | 120 | 21 | 48 | 2,20 | BT40.A120.D27S |
| 40 | 32 | 120 | 24 | 58 | 2,40 | BT40.A120.D32S |
| 50 | 16 | 110 | 17 | 32 | 3,15 | BT50.A110.D16S |
| 50 | 22 | 110 | 19 | 40 | 3,40 | BT50.A110.D22S |
| 50 | 27 | 110 | 21 | 48 | 3,40 | BT50.A110.D27S |
| 50 | 32 | 110 | 24 | 58 | 4,10 | BT50.A110.D32S |
| 50 | 40 | 110 | 27 | 70 | 4,30 | BT50.A110.D40S |

DIN 2080

## TYP/TYPE ISO-DC 7332

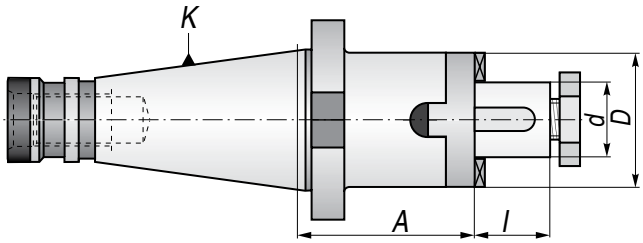


| 7:24 | d | A | l | D | Waga/Weight kg | Kod/Code |
|---|---|---|---|---|---|---|
| 30 | 16 | 50 | 17 | 32 | 0,65 | ISO30.A50.D16C |
| 30 | 22 | 50 | 19 | 40 | 0,85 | ISO30.A50.D22C |
| 30 | 27 | 50 | 21 | 48 | 0,95 | ISO30.A50.D27C |
| 30 | 32 | 50 | 24 | 58 | 1,10 | ISO30.A50.D32C |
| 40 | 16 | 52 | 17 | 32 | 1,10 | ISO40.A52.D16C |
| 40 | 22 | 52 | 19 | 40 | 1,30 | ISO40.A52.D22C |
| 40 | 27 | 52 | 21 | 48 | 1,60 | ISO40.A52.D27C |
| 40 | 32 | 52 | 24 | 58 | 1,85 | ISO40.A52.D32C |
| 40 | 40 | 52 | 27 | 70 | 2,05 | ISO40.A52.D40C |
| 50 | 16 | 55 | 17 | 32 | 2,98 | ISO50.A55.D16C |
| 50 | 22 | 55 | 19 | 40 | 3,05 | ISO50.A55.D22C |
| 50 | 27 | 55 | 21 | 48 | 3,25 | ISO50.A55.D27C |
| 50 | 32 | 55 | 24 | 58 | 3,50 | ISO50.A55.D32C |
| 50 | 40 | 55 | 27 | 70 | 3,85 | ISO50.A55.D40C |
| 50 | 50 | 55 | 30 | 90 | 4,05 | ISO50.A55.D50C |

DIN 69871-A

## TYP/TYPE DIN-DC 7301

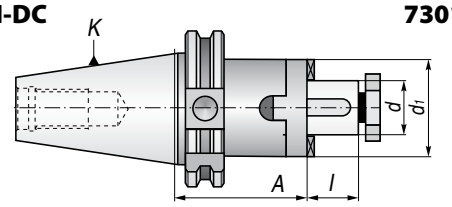


| 7:24 | d | A | l | D | Waga/Weight kg | Kod/Code |
|---|---|---|---|---|---|---|
| 40 | 16 | 55 | 17 | 32 | 1,00 | DIN40.A55.D16C |
| 40 | 22 | 55 | 19 | 40 | 1,10 | DIN40.A55.D22C |
| 40 | 27 | 55 | 21 | 48 | 1,25 | DIN40.A55.D27C |
| 40 | 32 | 60 | 24 | 58 | 1,55 | DIN40.A60.D32C |
| 40 | 40 | 60 | 27 | 70 | 1,80 | DIN40.A60.D40C |
| 50 | 16 | 55 | 17 | 32 | 2,80 | DIN50.A55.D16C |
| 50 | 22 | 55 | 19 | 40 | 2,95 | DIN50.A55.D22C |
| 50 | 27 | 55 | 21 | 48 | 3,20 | DIN50.A55.D27C |
| 50 | 32 | 55 | 24 | 58 | 3,45 | DIN50.A55.D32C |
| 50 | 40 | 55 | 27 | 70 | 3,80 | DIN50.A55.D40C |
| 50 | 50 | 70 | 30 | 90 | 4,05 | DIN50.A70.D50C |

MAS 403-BT

## TYP/TYPE BT-DC 7361

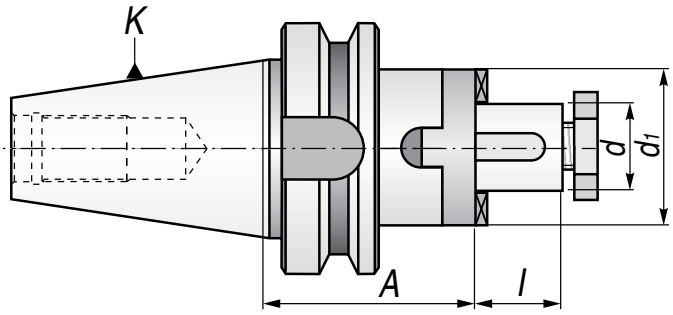


| 7:24 | d | A | l | D | Waga/Weight kg | Kod/Code |
|---|---|---|---|---|---|---|
| 40 | 16 | 55 | 17 | 32 | 1,20 | BT40.A55.D16C |
| 40 | 22 | 55 | 19 | 40 | 1,40 | BT40.A55.D22C |
| 40 | 27 | 55 | 21 | 48 | 1,70 | BT40.A55.D27C |
| 40 | 32 | 60 | 24 | 58 | 1,95 | BT40.A60.D32C |
| 40 | 40 | 60 | 27 | 70 | 2,15 | BT40.A60.D40C |
| 50 | 16 | 70 | 17 | 32 | 3,00 | BT50.A70.D16C |
| 50 | 22 | 70 | 19 | 40 | 3,15 | BT50.A70.D22C |
| 50 | 27 | 70 | 21 | 48 | 3,35 | BT50.A70.D27C |
| 50 | 32 | 70 | 24 | 58 | 3,60 | BT50.A70.D32C |
| 50 | 40 | 70 | 27 | 70 | 3,95 | BT50.A70.D40C |
| 50 | 50 | 70 | 30 | 90 | 4,15 | BT50.A70.D50C |

| 7:24 | d | A | l | D | Waga/Weight kg | Kod/Code |
|---|---|---|---|---|---|---|
| 30 | 16 | 35 | 17 | 32 | 0,53 | ISO30.A35.D16C |
| 30 | 22 | 35 | 19 | 40 | 0,65 | ISO30.A35.D22C |
| 30 | 27 | 35 | 21 | 48 | 0,82 | ISO30.A35.D27C |
| 40 | 16 | 37 | 17 | 32 | 0,98 | ISO40.A37.D16C |
| 40 | 22 | 37 | 19 | 40 | 1,12 | ISO40.A37.D22C |
| 40 | 27 | 37 | 21 | 48 | 1,30 | ISO40.A37.D27C |
| 40 | 32 | 41 | 24 | 58 | 1,54 | ISO40.A41.D32C |
| 40 | 40 | 45 | 27 | 70 | 1,95 | ISO40.A45.D40C |
| 30 | 16 | 73 | 17 | 32 | 0,75 | ISO30.A73.D16C |
| 30 | 22 | 73 | 19 | 40 | 1,00 | ISO30.A73.D22C |
| 30 | 27 | 73 | 21 | 48 | 1,30 | ISO30.A73.D27C |
| 40 | 16 | 75 | 17 | 32 | 1,20 | ISO40.A75.D16C |
| 40 | 22 | 75 | 19 | 40 | 1,50 | ISO40.A75.D22C |
| 40 | 27 | 75 | 21 | 48 | 1,80 | ISO40.A75.D27C |
| 40 | 32 | 75 | 24 | 58 | 2,20 | ISO40.A75.D32C |
| 40 | 40 | 75 | 27 | 70 | 3,00 | ISO40.A75.D40C |
| 50 | 16 | 78 | 17 | 32 | 3,10 | ISO50.A78.D16C |
| 50 | 22 | 78 | 19 | 40 | 3,30 | ISO50.A78.D22C |
| 50 | 27 | 78 | 21 | 48 | 3,70 | ISO50.A78.D27C |
| 50 | 32 | 78 | 24 | 58 | 4,10 | ISO50.A78.D32C |
| 50 | 40 | 78 | 27 | 70 | 4,90 | ISO50.A78.D40C |
| 50 | 50 | 78 | 30 | 90 | 6,30 | ISO50.A78.D50C |

DIN 2080

## TYP/TYPE ISO-DF 2824

| 7:24 | d | d1 | A | l | Waga/Weight kg | Kod/Code |
|---|---|---|---|---|---|---|
| 40 | 40 | 66 | 30 | 30 | 1,30 | ISO40.A30.D40DF |
| 40 | 50 | 101 | 30 | 40 | 1,50 | ISO40.A30.D50DF |
| 40 | 60 | 101 | 30 | 40 | 2,00 | ISO40.A30.D60DF |
| 50 | 40 | 66 | 30 | 30 | 2,80 | ISO50.A30.D40DF |
| 50 | 50 | 101 | 30 | 40 | 3,00 | ISO50.A30.D50DF |
| 50 | 60 | 101 | 30 | 40 | 4,50 | ISO50.A30.D60DF |

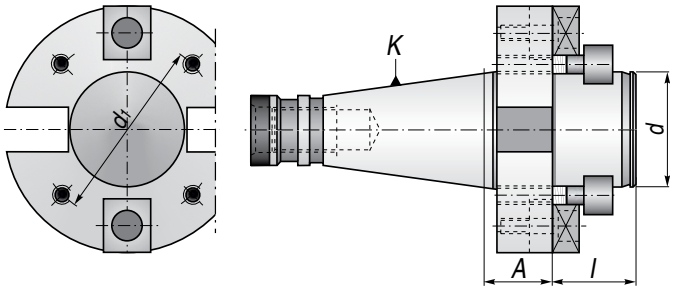


DIN 69871-A

## TYP/TYPE DIN-DF 2827

| 7:24 | d | d1 | A | l | Waga/Weight kg | Kod/Code |
|---|---|---|---|---|---|---|
| 40 | 40 | 66,7 | 60 | 30 | 1,50 | DIN40.A60.D40DF |
| 40 | 60 | 101,6 | 60 | 40 | 2,00 | DIN40.A60.D60DF |
| 50 | 40 | 66,7 | 70 | 30 | 2,90 | DIN50.A70.D40DF |
| 50 | 60 | 101,6 | 70 | 40 | 4,40 | DIN50.A70.D60DF |

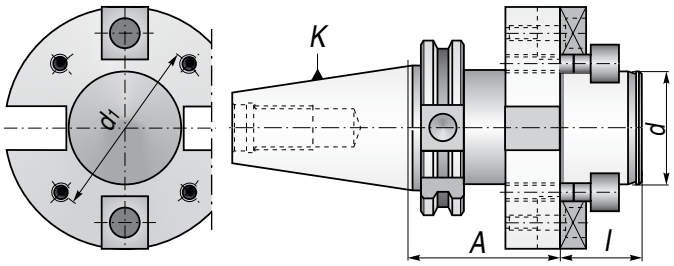


MAS 403-BT

## TYP/TYPE BT-DF 2826

| 7:24 | d | d1 | A | l | Waga/Weight kg | Kod/Code |
|---|---|---|---|---|---|---|
| 40 | 40 | 66,7 | 60 | 30 | 1,50 | BT40.A60.D40DF |
| 40 | 60 | 101,6 | 60 | 40 | 2,00 | BT40.A60.D60DF |
| 50 | 40 | 66,7 | 70 | 30 | 2,90 | BT50.A70.D40DF |
| 50 | 60 | 101,6 | 80 | 40 | 4,40 | BT50.A80.D60DF |

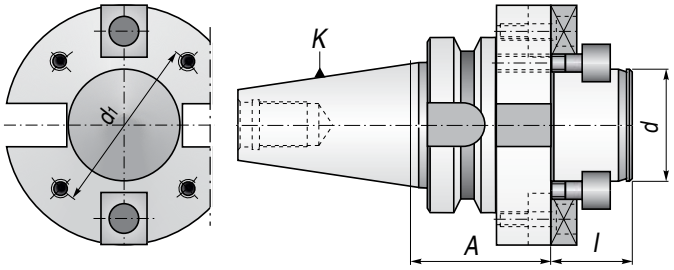

DIN 2080

## TYP/TYPE ISO-UW 7657

| 7:24 | $d_1$ | D | A | Waga/Weight kg | Kod/Code |
|---|---|---|---|---|---|
| 40 | 1-13 | 50 | 88 | 2,00 | ISO40.A88.D13UW |
| 40 | 3-16 | 57 | 99 | 2,40 | ISO40.A99.D16UW |
| 50 | 1-13 | 50 | 85 | 4,60 | ISO50.A85.D13UW |
| 50 | 3-16 | 57 | 89 | 5,20 | ISO50.A89.D16UW |

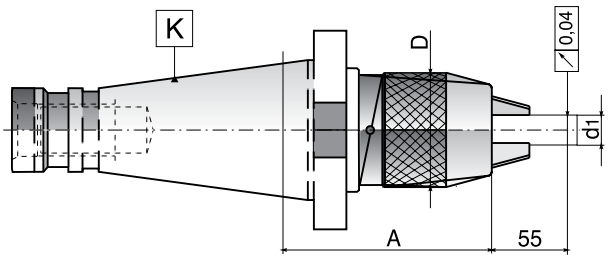


DIN 69871-A

## TYP/TYPE DIN-UW 7655

| 7:24 | $d_1$ | D | A | Waga/Weight kg | Kod/Code |
|---|---|---|---|---|---|
| 40 | 1-13 | 50 | 87 | 2,00 | DIN40.A87.D13UW |
| 40 | 3-16 | 57 | 106 | 2,40 | DIN40.A106.D16UW |
| 50 | 1-13 | 50 | 87 | 4,60 | DIN50.A87.D13UW |
| 50 | 3-16 | 57 | 90 | 5,20 | DIN50.A90.D16UW |

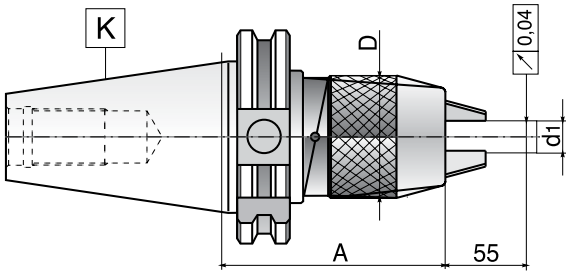


MAS 403-BT

## TYP/TYPE BT-UW 7656

| 7:24 | $d_1$ | D | A | Waga/Weight kg | Kod/Code |
|---|---|---|---|---|---|
| 40 | 1-13 | 50 | 95 | 2,00 | BT40.A95.D13UW |
| 40 | 3-16 | 57 | 100 | 2,40 | BT40.A100.D16UW |
| 50 | 1-13 | 50 | 105 | 4,60 | BT50.A105.D13UW |
| 50 | 3-16 | 57 | 110 | 5,20 | BT50.A110.D16UW |

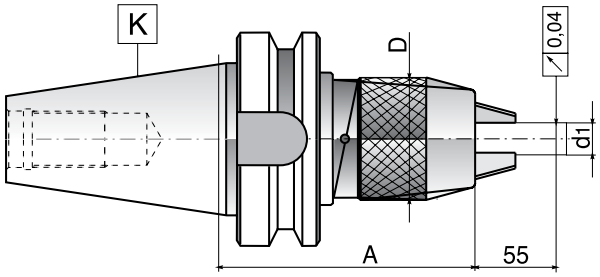

DIN 2080

## TYP/TYPE ISO-B 5370

| 7:24 | DIN | A | Waga/Weight kg | Kod/Code |
|---|---|---|---|---|
| 30 | B10 | 15 | 0,60 | ISO30.A15.B10 |
| 30 | B12 | 15 | 0,60 | ISO30.A15.B12 |
| 30 | B16 | 15 | 0,60 | ISO30.A15.B16 |
| 30 | B18 | 15 | 0,60 | ISO30.A15.B18 |
| 30 | B22 | 15 | 0,60 | ISO30.A15.B22 |
| 40 | B12 | 17 | 1,00 | ISO40.A17.B12 |
| 40 | B16 | 17 | 1,00 | ISO40.A17.B16 |
| 40 | B18 | 17 | 1,00 | ISO40.A17.B18 |
| 40 | B22 | 17 | 1,00 | ISO40.A17.B22 |
| 40 | B24 | 17 | 1,00 | ISO40.A17.B24 |
| 50 | B16 | 20 | 2,70 | ISO50.A20.B16 |
| 50 | B18 | 20 | 2,70 | ISO50.A20.B18 |
| 50 | B22 | 20 | 2,70 | ISO50.A20.B22 |
| 50 | B24 | 20 | 2,70 | ISO50.A20.B24 |

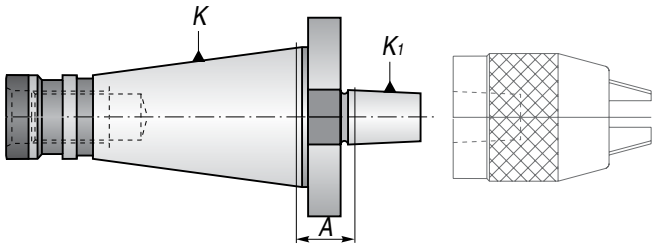


DIN 69871-A

## TYP/TYPE DIN-B 5374

| 7:24 | DIN | A | Waga/Weight kg | Kod/Code |
|---|---|---|---|---|
| 30 | B12 | 25 | 0,60 | DIN30.A25.B12 |
| 30 | B16 | 25 | 0,60 | DIN30.A25.B16 |
| 40 | B12 | 40 | 1,10 | DIN40.A40.B12 |
| 40 | B16 | 40 | 1,10 | DIN40.A40.B16 |
| 40 | B18 | 40 | 1,10 | DIN40.A40.B18 |
| 50 | B16 | 40 | 2,70 | DIN50.A40.B16 |
| 50 | B18 | 40 | 2,70 | DIN50.A40.B18 |

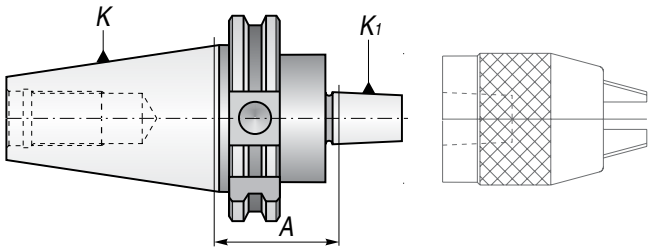


MAS 403-BT

## TYP/TYPE BT-B 5373

| 7:24 | DIN | A | Waga/Weight kg | Kod/Code |
|---|---|---|---|---|
| 30 | B12 | 30 | 0,60 | BT30.A30.B12 |
| 30 | B16 | 30 | 0,60 | BT30.A30.B16 |
| 40 | B12 | 40 | 1,20 | BT40.A40.B12 |
| 40 | B16 | 42 | 1,20 | BT40.A42.B16 |
| 40 | B18 | 42 | 1,20 | BT40.A42.B18 |
| 50 | B16 | 45 | 2,70 | BT50.A45.B16 |
| 50 | B18 | 45 | 2,70 | BT50.A45.B18 |

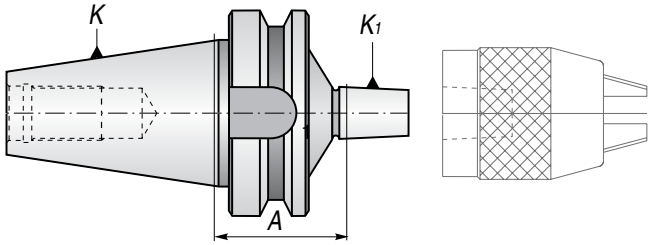

DIN 2080

## TYP/TYPE ISO-WE 7620

| 7:24 | d | A | Rys. | D | Waga/Weight kg | Kod/Code |
|---|---|---|---|---|---|---|
| 30 | 6 | 40 | 1 | 25 | 0,50 | ISO30.A40.WE06 |
| 30 | 8 | 40 | 1 | 28 | 0,50 | ISO30.A40.WE08 |
| 30 | 10 | 40 | 1 | 35 | 0,60 | ISO30.A40.WE10 |
| 30 | 12 | 40 | 1 | 42 | 0,60 | ISO30.A40.WE12 |
| 30 | 16 | 50 | 1 | 48 | 0,90 | ISO30.A50.WE16 |
| 30 | 20 | 63 | 1 | 52 | 1,00 | ISO30.A63.WE20 |
| 30 | 25 | 68 | 2 | 63 | 1,20 | ISO30.A68.WE25 |
| 40 | 6 | 50 | 1 | 25 | 0,80 | ISO40.A50.WE06 |
| 40 | 8 | 50 | 1 | 28 | 0,80 | ISO40.A50.WE08 |
| 40 | 10 | 50 | 1 | 35 | 0,90 | ISO40.A50.WE10 |
| 40 | 12 | 50 | 1 | 42 | 1,00 | ISO40.A50.WE12 |
| 40 | 14 | 50 | 1 | 44 | 1,30 | ISO40.A50.WE14 |
| 40 | 16 | 63 | 1 | 48 | 1,40 | ISO40.A63.WE16 |
| 40 | 20 | 63 | 1 | 52 | 1,40 | ISO40.A63.WE20 |
| 40 | 25 | 80 | 2 | 63 | 2,00 | ISO40.A80.WE25 |
| 40 | 32 | 80 | 2 | 72 | 2,30 | ISO40.A80.WE32 |
| 40 | 32 | 100 | 2 | 72 | 2,50 | ISO40.A100.WE32 |
| 50 | 6 | 63 | 1 | 25 | 3,30 | ISO50.A63.WE06 |
| 50 | 8 | 63 | 1 | 28 | 3,30 | ISO50.A63.WE08 |
| 50 | 10 | 63 | 1 | 35 | 3,60 | ISO50.A63.WE10 |
| 50 | 12 | 63 | 1 | 42 | 3,80 | ISO50.A63.WE12 |
| 50 | 14 | 63 | 1 | 44 | 3,90 | ISO50.A63.WE14 |
| 50 | 16 | 63 | 1 | 48 | 4,10 | ISO50.A63.WE16 |
| 50 | 18 | 63 | 1 | 50 | 4,20 | ISO50.A63.WE18 |
| 50 | 20 | 63 | 1 | 52 | 4,30 | ISO50.A63.WE20 |
| 50 | 25 | 80 | 2 | 65 | 5,00 | ISO50.A80.WE25 |
| 50 | 32 | 81 | 2 | 70 | 5,30 | ISO50.A81.WE32 |
| 50 | 40 | 91 | 2 | 90 | 5,60 | ISO50.A91.WE40 |
| 50 | 50 | 110 | 2 | 97 | 6,10 | ISO50.A110.WE50 |

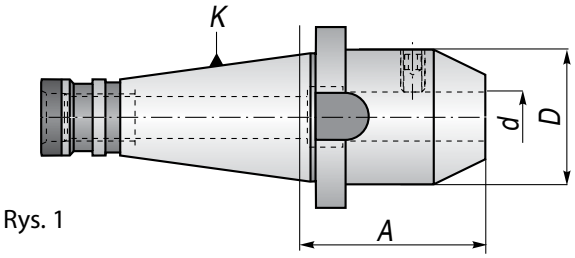

Rys. 1

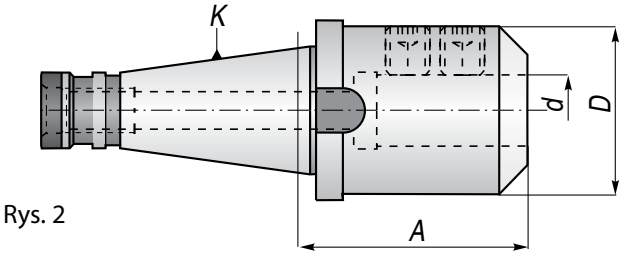

Rys. 2

| 7:24 | d | A | Rys. | D | Waga/Weight kg | Kod/Code |
|---|---|---|---|---|---|---|
| 40 | 6 | 25 | 3 | 25 | 0,70 | ISO40.A25.WE06 |
| 40 | 8 | 25 | 3 | 28 | 0,70 | ISO40.A25.WE08 |
| 40 | 10 | 27 | 3 | 35 | 0,80 | ISO40.A27.WE10 |
| 40 | 12 | 29 | 3 | 42 | 0,90 | ISO40.A29.WE12 |
| 40 | 14 | 30 | 3 | 44 | 1,15 | ISO40.A30.WE14 |
| 40 | 16 | 31 | 3 | 48 | 1,25 | ISO40.A31.WE16 |
| 40 | 20 | 35 | 3 | 52 | 1,25 | ISO40.A35.WE20 |
| 40 | 25 | 60 | 4 | 65 | 1,80 | ISO40.A60.WE25 |
| 40 | 32 | 70 | 4 | 72 | 2,10 | ISO40.A70.WE32 |
| 50 | 20 | 36 | 3 | 52 | 4,00 | ISO50.A36.WE20 |
| 50 | 25 | 60 | 4 | 65 | 4,70 | ISO50.A60.WE25 |
| 50 | 32 | 70 | 4 | 70 | 5,00 | ISO50.A70.WE32 |

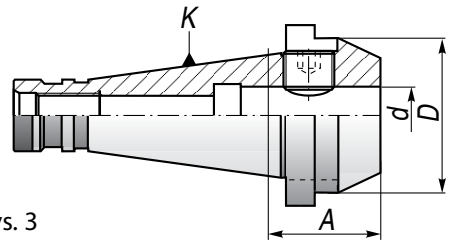

Rys. 3

| 7:24 | d | A | Rys. | D | Waga/Weight kg | Kod/Code |
|---|---|---|---|---|---|---|
| 50 | 6 | 130 | 1 | 25 | 3,80 | ISO50.A130.WE06 |
| 50 | 8 | 130 | 1 | 28 | 3,90 | ISO50.A130.WE08 |
| 50 | 10 | 130 | 1 | 35 | 4,10 | ISO50.A130.WE10 |
| 50 | 12 | 130 | 1 | 42 | 4,20 | ISO50.A130.WE12 |
| 50 | 16 | 130 | 1 | 48 | 5,00 | ISO50.A130.WE16 |
| 50 | 16 | 160 | 1 | 48 | 5,50 | ISO50.A160.WE16 |
| 50 | 16 | 200 | 1 | 48 | 5,80 | ISO50.A200.WE16 |
| 50 | 20 | 130 | 1 | 52 | 5,30 | ISO50.A130.WE20 |
| 50 | 25 | 130 | 2 | 65 | 5,80 | ISO50.A130.WE25 |
| 50 | 25 | 160 | 2 | 65 | 6,4 | ISO50.A160.WE25 |
| 50 | 32 | 100 | 2 | 70 | 5,50 | ISO50.A100.WE32 |
| 50 | 32 | 130 | 2 | 72 | 6,10 | ISO50.A130.WE32 |
| 50 | 32 | 160 | 2 | 72 | 6,80 | ISO50.A160.WE32 |
| 50 | 40 | 100 | 2 | 90 | 6,20 | ISO50.A100.WE40 |

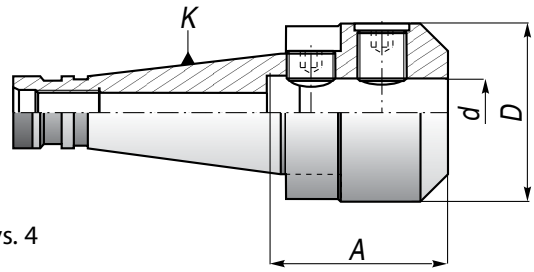

Rys. 4

DIN 69871-A

## TYP/TYPE DIN-WE 7625

| 7:24 | d | A | Rys. | $d_1$ | Waga/Weight kg | Kod/Code |
|---|---|---|---|---|---|---|
| 30 | 6 | 50 | 1 | 25 | 0,50 | DIN30.A50.WE06 |
| 30 | 8 | 50 | 1 | 28 | 0,50 | DIN30.A50.WE08 |
| 30 | 10 | 50 | 1 | 35 | 0,60 | DIN30.A50.WE10 |
| 30 | 12 | 50 | 1 | 42 | 0,60 | DIN30.A50.WE12 |
| 30 | 16 | 63 | 1 | 44 | 0,90 | DIN30.A63.WE16 |
| 30 | 20 | 63 | 1 | 44 | 1,00 | DIN30.A63.WE20 |
| 40 | 6 | 50 | 1 | 25 | 0,90 | DIN40.A50.WE06 |
| 40 | 8 | 50 | 1 | 28 | 0,90 | DIN40.A50.WE08 |
| 40 | 10 | 50 | 1 | 35 | 1,00 | DIN40.A50.WE10 |
| 40 | 12 | 50 | 1 | 42 | 1,10 | DIN40.A50.WE12 |
| 40 | 14 | 50 | 1 | 44 | 1,30 | DIN40.A50.WE14 |
| 40 | 16 | 63 | 1 | 44,5 | 1,40 | DIN40,A63.WE16 |
| 40 | 18 | 63 | 1 | 50 | 1,50 | DIN40.A63.WE18 |
| 40 | 20 | 63 | 1 | 44,5 | 1,40 | DIN40.A63.WE20 |
| 40 | 25 | 100 | 2 | 63 | 2,00 | DIN40.A100.WE25 |
| 40 | 32 | 100 | 2 | 72 | 2,30 | DIN40.A100.WE32 |
| 50 | 6 | 63 | 1 | 25 | 3,30 | DIN50.A63.WE06 |
| 50 | 8 | 63 | 1 | 28 | 3,30 | DIN40.A63.WE08 |
| 50 | 10 | 63 | 1 | 35 | 3,60 | DIN50.A63.WE10 |
| 50 | 12 | 63 | 1 | 42 | 3,80 | DIN50.A63.WE12 |
| 50 | 14 | 63 | 1 | 44 | 3,90 | DIN50.A63.WE14 |
| 50 | 16 | 63 | 1 | 48 | 4,10 | DIN50.A63.WE16 |
| 50 | 18 | 63 | 1 | 50 | 4,10 | DIN50.A63.WE18 |
| 50 | 20 | 63 | 1 | 52 | 4,40 | DIN50.A63.WE20 |
| 50 | 25 | 80 | 2 | 65 | 5,00 | DIN50.A80.WE25 |
| 50 | 32 | 100 | 2 | 72 | 5,30 | DIN50.A100.WE32 |
| 50 | 40 | 120 | 2 | 90 | 5,60 | DIN50.A120.WE40 |
| 50 | 50 | 130 | 2 | 100 | 6,10 | DIN50.A130.WE50 |

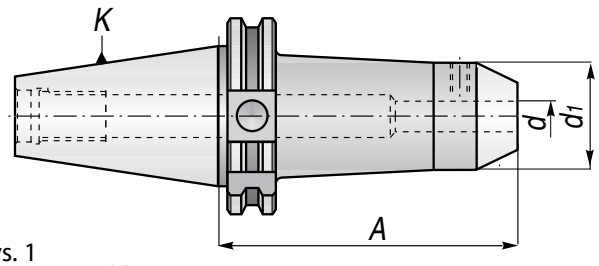

Rys. 1

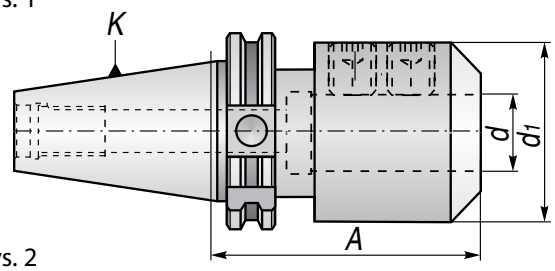

Rys. 2

| 7:24 | d | A | Rys. | d1 | Waga/Weight kg | Kod/Code |
|---|---|---|---|---|---|---|
| 40 | 6 | 30 | 1 | 25 | 0,80 | DIN40.A30.WE06 |
| 40 | 8 | 30 | 1 | 28 | 0,80 | DIN40.A30.WE08 |
| 40 | 10 | 32 | 1 | 35 | 0,90 | DIN40.A32.WE10 |
| 40 | 12 | 34 | 1 | 42 | 1,00 | DIN40.A34.WE12 |
| 40 | 14 | 34 | 1 | 44 | 1,15 | DIN40.A34.WE14 |
| 40 | 16 | 35 | 1 | 44 | 1,25 | DIN40.A35.WE16 |
| 40 | 20 | 35 | 1 | 44,5 | 1,20 | DIN40.A35.WE20 |
| 40 | 25 | 60 | 2 | 44,5 | 1,80 | DIN40.A60.WE25 |
| 40 | 32 | 70 | 2 | 72 | 2,10 | DIN40.A70.WE32 |
| 50 | 20 | 35 | 1 | 52 | 4,00 | DIN50.A35.WE20 |
| 50 | 25 | 60 | 2 | 69,9 | 4,70 | DIN50.A60.WE25 |
| 50 | 32 | 70 | 2 | 69,9 | 5,00 | DIN50.A70.WE32 |
| 50 | 40 | 100 | 2 | 80 | 5,50 | DIN50.A100.WE40 |

| 7:24 | d | A | Rys. | d1 | Waga/Weight kg | Kod/Code |
|---|---|---|---|---|---|---|
| 40 | 6 | 100 | 1 | 25 | 1,10 | DIN40.A100.WE06 |
| 40 | 6 | 130 | 1 | 25 | 1,30 | DIN40.A130.WE06 |
| 40 | 8 | 100 | 1 | 28 | 1,20 | DIN40.A100.WE08 |
| 40 | 8 | 130 | 1 | 28 | 1,40 | DIN40.A130.WE08 |
| 40 | 10 | 100 | 1 | 35 | 1,50 | DIN40.A100.WE10 |
| 40 | 10 | 130 | 1 | 35 | 1,70 | DIN40.A130.WE10 |
| 40 | 12 | 100 | 1 | 42 | 1,70 | DIN40.A100.WE12 |
| 40 | 12 | 130 | 1 | 42 | 1,90 | DIN40.A130.WE12 |
| 40 | 14 | 63 | 1 | 44 | 1,40 | DIN40.A63.WE14 |
| 50 | 6 | 130 | 1 | 25 | 4,40 | DIN50.A130.WE06 |
| 50 | 8 | 130 | 1 | 28 | 4,20 | DIN50.A130.WE08 |
| 50 | 10 | 130 | 1 | 35 | 4,40 | DIN50.A130.WE10 |
| 50 | 12 | 130 | 1 | 42 | 4,50 | DIN50.A130.WE12 |
| 50 | 16 | 100 | 1 | 48 | 4,70 | DIN50.A100.WE16 |
| 50 | 16 | 130 | 1 | 48 | 5,10 | DIN50.A130.WE16 |
| 50 | 20 | 130 | 1 | 52 | 5,20 | DIN50.A130.WE20 |
| 50 | 25 | 130 | 2 | 65 | 5,10 | DIN50.A130.WE25 |
| 50 | 32 | 130 | 2 | 72 | 6,00 | DIN50.A130.WE32 |
| 50 | 32 | 160 | 2 | 72 | 6,50 | DIN50.A160.WE32 |

## TYP/TYPE BT-WE 7624

| 7:24 | d | A | Rys. | $d_1$ | Waga/Weight kg | Kod/Code |
|---|---|---|---|---|---|---|
| 30 | 6 | 50 | 1 | 25 | 0,50 | BT30.A50.WE06 |
| 30 | 8 | 50 | 1 | 28 | 0,50 | BT30.A50.WE08 |
| 30 | 10 | 50 | 1 | 35 | 0,60 | BT30.A50.WE10 |
| 30 | 12 | 50 | 1 | 42 | 0,60 | BT30.A50.WE12 |
| 30 | 16 | 63 | 1 | 48 | 0,90 | BT30.A63.WE16 |
| 30 | 20 | 63 | 1 | 52 | 1,00 | BT30.A63.WE20 |
| 40 | 6 | 50 | 1 | 25 | 0,90 | BT40.A50.WE06 |
| 40 | 8 | 50 | 1 | 28 | 0,90 | BT40.A50.WE08 |
| 40 | 10 | 63 | 1 | 35 | 1,00 | BT40.A63.WE10 |
| 40 | 12 | 63 | 1 | 42 | 1,10 | BT40.A63.WE12 |
| 40 | 14 | 63 | 1 | 44 | 1,30 | BT40.A63.WE14 |
| 40 | 16 | 63 | 1 | 48 | 1,40 | BT40.A63.WE16 |
| 40 | 20 | 63 | 1 | 50 | 1,40 | BT40.A63.WE20 |
| 40 | 25 | 90 | 2 | 63 | 2,00 | BT40.A90.WE25 |
| 40 | 32 | 100 | 2 | 72 | 2,30 | BT40.A100.WE32 |
| 50 | 6 | 63 | 1 | 25 | 3,30 | BT50.A63.WE06 |
| 50 | 8 | 63 | 1 | 28 | 3,30 | BT50.A63.WE08 |
| 50 | 10 | 63 | 1 | 35 | 3,60 | BT50.A63.WE10 |
| 50 | 12 | 80 | 1 | 42 | 3,80 | BT50.A80.WE12 |
| 50 | 14 | 80 | 1 | 44 | 3,90 | BT50.A80.WE14 |
| 50 | 16 | 80 | 1 | 48 | 4,10 | BT50.A80.WE16 |
| 50 | 20 | 80 | 1 | 52 | 4,30 | BT50.A80.WE20 |
| 50 | 25 | 100 | 2 | 63 | 5,00 | BT50.A100.WE25 |
| 50 | 32 | 105 | 2 | 72 | 5,30 | BT50.A105.WE32 |
| 50 | 40 | 120 | 2 | 90 | 5,60 | BT50.A120.WE40 |
| 50 | 50 | 130 | 2 | 100 | 6,10 | BT50.A130.WE50 |

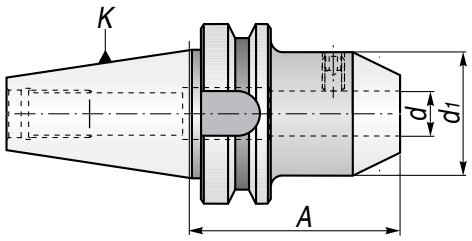


Rys. 1

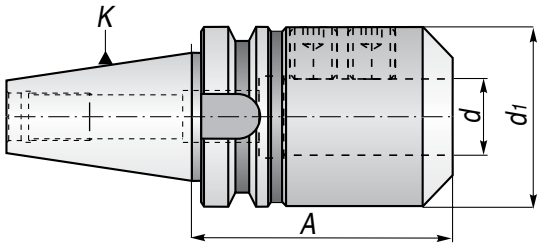


Rys. 2

| 7:24 | d | A | Rys. | d1 | Waga/Weight kg | Kod/Code |
|---|---|---|---|---|---|---|
| 40 | 6 | 35 | 3 | 25 | 0,80 | BT40.A35.WE06 |
| 40 | 8 | 35 | 3 | 28 | 0,80 | BT40.A35.WE08 |
| 40 | 10 | 37 | 3 | 35 | 0,90 | BT40.A37.WE10 |
| 40 | 12 | 37 | 3 | 42 | 1,00 | BT40.A37.WE12 |
| 40 | 14 | 37 | 3 | 44 | 1,15 | BT40.A37.WE14 |
| 40 | 16 | 37 | 3 | 48 | 1,25 | BT40.A37.WE16 |
| 40 | 20 | 37 | 3 | 50 | 1,20 | BT40.A37.WE20 |
| 40 | 25 | 60 | 4 | 63 | 1,80 | BT40.A60.WE25 |
| 40 | 32 | 65 | 4 | 72 | 2,10 | BT40.A65.WE32 |
| 50 | 20 | 40 | 3 | 52 | 4,00 | BT50.A40.WE20 |
| 50 | 25 | 60 | 4 | 63 | 4,70 | BT50.A60.WE25 |
| 50 | 32 | 70 | 4 | 72 | 5,00 | BT50.A70.WE32 |

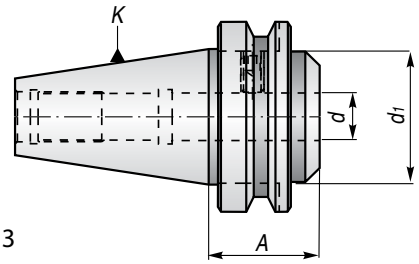


Rys. 3

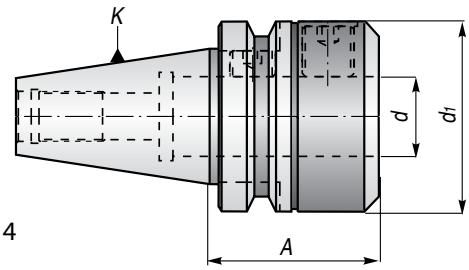


Rys. 4

DIN 2080

## TYP/TYPE ISO-ER 7616

| 7:24 | ER | A | Range Zakres | D | Waga/Weight kg | Kod/Code |
|---|---|---|---|---|---|---|
| 30 | ER16 | 50 | 2-10 | 32 | 0,6 | ISO30.A50.ER16 |
| 30 | ER32 | 50 | 2-20 | 50 | 0,6 | ISO30.A50.ER32 |
| 40 | ER25 | 60 | 2-16 | 42 | 1,0 | ISO40.A60.ER25 |
| 40 | ER32 | 60 | 2-20 | 50 | 1,2 | ISO40.A60.ER32 |
| 40 | ER32 | 100 | 2-20 | 50 | 1,5 | ISO40.A100.ER32 |
| 40 | ER32 | 130 | 2-20 | 50 | 1,8 | ISO40.A130.ER32 |
| 40 | ER40 | 60 | 3-26 | 63 | 1,2 | ISO40.A60.ER40 |
| 50 | ER32 | 70 | 2-20 | 50 | 3,1 | ISO50.A70.ER32 |
| 50 | ER32 | 130 | 2-20 | 50 | 3,9 | ISO50.A130.ER32 |
| 50 | ER40 | 70 | 3-26 | 63 | 3,2 | ISO50.A70.ER40 |
| 50 | ER40 | 130 | 3-26 | 63 | 4,3 | ISO50.A130.ER40 |

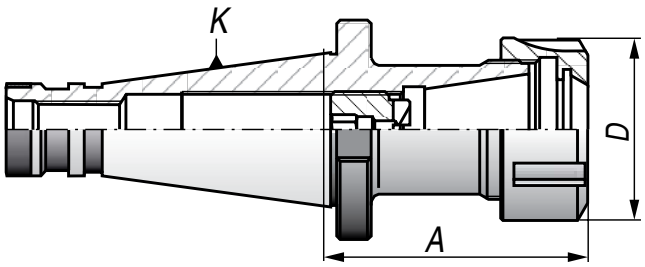


DIN 69871-A

## TYP/TYPE DIN-ER 7617

| 7:24 | ER | A | Range Zakres | D | Waga/Weight kg | Kod/Code |
|---|---|---|---|---|---|---|
| 30 | ER16 | 60 | 2-10 | 32 | 0,6 | DIN30.A60.ER16 |
| 30 | ER32 | 60 | 2-20 | 50 | 0,9 | DIN30.A60.ER32 |
| 30 | ER32 | 110 | 2-20 | 50 | 0,9 | DIN30.A110.ER32 |
| 40 | ER25 | 60 | 2-16 | 42 | 1,0 | DIN40.A60.ER25 |
| 40 | ER32 | 70 | 2-20 | 50 | 1,2 | DIN40.A70.ER32 |
| 40 | ER32 | 100 | 2-20 | 50 | 1,5 | DIN40.A100.ER32 |
| 40 | ER32 | 130 | 2-20 | 50 | 1,8 | DIN40.A130.ER32 |
| 40 | ER40 | 70 | 3-26 | 63 | 1,4 | DIN40.A70.ER40 |
| 50 | ER32 | 70 | 2-20 | 50 | 3,6 | DIN50.A70.ER32 |
| 50 | ER32 | 130 | 2-20 | 50 | 4,7 | DIN50.A130.ER32 |
| 50 | ER40 | 80 | 3-26 | 63 | 4,2 | DIN50.A80.ER40 |
| 50 | ER40 | 130 | 3-26 | 63 | 5,0 | DIN50.A130.ER40 |

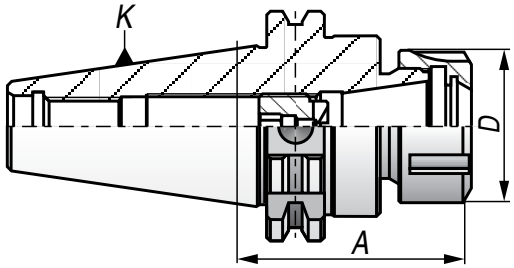


MAS 403-BT

## TYP/TYPE BT-ER 7626

| 7:24 | ER | A | Range Zakres | D | Waga/Weight kg | Kod/Code |
|---|---|---|---|---|---|---|
| 30 | ER16 | 110 | 2-10 | 32 | 0,6 | BT30.A100.ER16 |
| 30 | ER16 | 60 | 2-10 | 32 | 0,6 | BT30.A60.ER16 |
| 30 | ER32 | 60 | 2-20 | 50 | 0,9 | BT30.A60.ER32 |
| 30 | ER32 | 150 | 2-10 | 32 | 0,6 | BT30.A150.ER32 |
| 40 | ER25 | 60 | 2-16 | 42 | 1,3 | BT40.A60.ER25 |
| 40 | ER32 | 70 | 2-20 | 50 | 1,6 | BT40.A70.ER32 |
| 40 | ER32 | 100 | 2-20 | 50 | 1,5 | BT40.A100.ER32 |
| 40 | ER32 | 130 | 2-20 | 50 | 1,8 | BT40.A130.ER32 |
| 40 | ER40 | 70 | 3-26 | 63 | 1,9 | BT40.A70.ER40 |
| 50 | ER32 | 70 | 2-20 | 50 | 3,5 | BT50.A70.ER32 |
| 50 | ER32 | 130 | 2-20 | 50 | 4,3 | BT50.A130.ER32 |
| 50 | ER40 | 80 | 3-26 | 63 | 4,1 | BT50.A80.ER40 |
| 50 | ER40 | 130 | 3-26 | 63 | 4,3 | BT50.A130.ER40 |

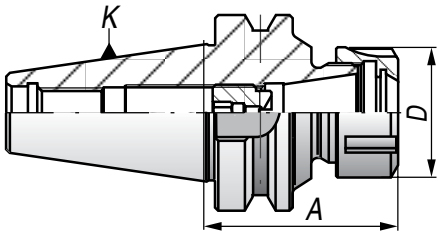

DIN 2080

## TYP/TYPE ISO-ERS — 7616-S
**Wersja przedłużona/Long**

| 7:24 | Collet Tulejka | A | Range Zakres | L | D | $D_1$ | Waga/Weight kg | Kod/Code |
|---|---|---|---|---|---|---|---|---|
| 40 | ER16 | 100 | 2-10 | – | 28 | – | 1,1 | ISO40.A100.ER16S |
| 40 | ER16 | 150 | 2-10 | 85 | 28 | 40 | 1,7 | ISO40.A150.ER16S |
| 50 | ER16 | 100 | 2-10 | – | 28 | – | 2,9 | ISO50.A100.ER16S |
| 50 | ER16 | 150 | 2-10 | 85 | 28 | 40 | 3,3 | ISO50.A150.ER16S |

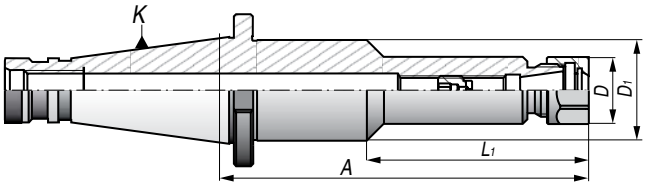


DIN 69871-A

## TYP/TYPE DIN-ERS — 7617-S
**Wersja przedłużona/Long**

| 7:24 | Collet Tulejka | A | Range Zakres | L | D | D1 | Waga/Weight kg | Kod/Code |
|---|---|---|---|---|---|---|---|---|
| 40 | ER16 | 100 | 2-10 | – | 28 | – | 1,1 | DIN40.A100.ER16S |
| 40 | ER16 | 150 | 2-10 | 85 | 28 | 40 | 1,6 | DIN40.A150.ER16S |
| 50 | ER16 | 100 | 2-10 | – | 28 | – | 3,0 | DIN50.A100.ER16S |
| 50 | ER16 | 150 | 2-10 | 85 | 28 | 40 | 3,3 | DIN50.A150.ER16S |

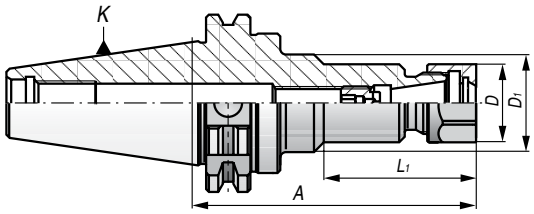


MAS 403-BT

## TYP/TYPE BT-ERS — 7626-S
**Wersja przedłużona/Long**

| 7:24 | Collet Tulejka | A | Range Zakres | L | D | D1 | Waga/Weight kg | Kod/Code |
|---|---|---|---|---|---|---|---|---|
| 40 | ER16 | 100 | 2-10 | – | 28 | – | 1,1 | BT40.A100.ER16S |
| 40 | ER16 | 150 | 2-10 | 85 | 28 | 40 | 1,6 | BT40.A150.ER16S |
| 50 | ER16 | 100 | 2-10 | – | 28 | – | 3,0 | BT50.A100.ER16S |
| 50 | ER16 | 150 | 2-10 | 85 | 28 | 40 | 3,3 | BT50.A150.ER16S |

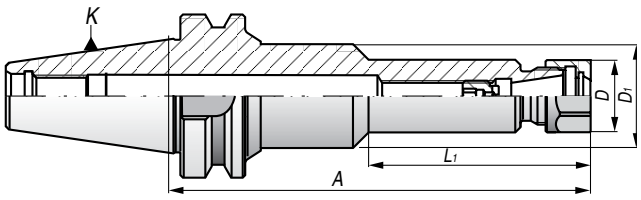

DIN 6499

## TYP/TYPE ER 7618

| ER | d | D | L | Kod/Code |
|---|---|---|---|---|
| 16 | 3 | 17 | 27,5 | ER16D3 |
| 16 | 4 | 17 | 27,5 | ER16D4 |
| 16 | 5 | 17 | 27,5 | ER16D5 |
| 16 | 6 | 17 | 27,5 | ER16D6 |
| 16 | 7 | 17 | 27,5 | ER16D7 |
| 16 | 8 | 17 | 27,5 | ER16D8 |
| 16 | 9 | 17 | 27,5 | ER16D9 |
| 16 | 10 | 17 | 27,5 | ER16D10 |
| 20 | 3 | 21 | 31,5 | ER20D3 |
| 20 | 4 | 21 | 31,5 | ER20D4 |
| 20 | 5 | 21 | 31,5 | ER20D5 |
| 20 | 6 | 21 | 31,5 | ER20D6 |
| 20 | 7 | 21 | 31,5 | ER20D7 |
| 20 | 8 | 21 | 31,5 | ER20D8 |
| 20 | 9 | 21 | 31,5 | ER20D9 |
| 20 | 10 | 21 | 31,5 | ER20D10 |
| 20 | 11 | 21 | 31,5 | ER20D11 |
| 20 | 12 | 21 | 31,5 | ER20D12 |
| 20 | 13 | 21 | 31,5 | ER20D13 |
| 25 | 3 | 26 | 34 | ER25D3 |
| 25 | 4 | 26 | 34 | ER25D4 |
| 25 | 5 | 26 | 34 | ER25D5 |
| 25 | 6 | 26 | 34 | ER25D6 |
| 25 | 7 | 26 | 34 | ER25D7 |
| 25 | 8 | 26 | 34 | ER25D8 |
| 25 | 9 | 26 | 34 | ER25D9 |
| 25 | 10 | 26 | 34 | ER25D10 |
| 25 | 11 | 26 | 34 | ER25D11 |
| 25 | 12 | 26 | 34 | ER25D12 |
| 25 | 13 | 26 | 34 | ER25D13 |
| 25 | 14 | 26 | 34 | ER25D14 |
| 25 | 15 | 26 | 34 | ER25D15 |
| 25 | 16 | 26 | 34 | ER25D16 |
| 32 | 3 | 33 | 40 | ER32D3 |
| 32 | 4 | 33 | 40 | ER32D4 |
| 32 | 5 | 33 | 40 | ER32D5 |
| 32 | 6 | 33 | 40 | ER32D6 |
| 32 | 7 | 33 | 40 | ER32D7 |
| 32 | 8 | 33 | 40 | ER32D8 |
| 32 | 9 | 33 | 40 | ER32D9 |
| 32 | 10 | 33 | 40 | ER32D10 |
| 32 | 11 | 33 | 40 | ER32D11 |
| 32 | 12 | 33 | 40 | ER32D12 |
| 32 | 13 | 33 | 40 | ER32D13 |
| 32 | 14 | 33 | 40 | ER32D14 |

| ER | d | D | L | Kod/Code |
|---|---|---|---|---|
| 32 | 15 | 33 | 40 | ER32D15 |
| 32 | 16 | 33 | 40 | ER32D16 |
| 32 | 17 | 33 | 40 | ER32D17 |
| 32 | 18 | 33 | 40 | ER32D18 |
| 32 | 19 | 33 | 40 | ER32D19 |
| 32 | 20 | 33 | 40 | ER32D20 |
| 40 | 4 | 41 | 46 | ER40D4 |
| 40 | 5 | 41 | 46 | ER40D5 |
| 40 | 6 | 41 | 46 | ER40D6 |
| 40 | 7 | 41 | 46 | ER40D7 |
| 40 | 8 | 41 | 46 | ER40D8 |
| 40 | 9 | 41 | 46 | ER40D9 |
| 40 | 10 | 41 | 46 | ER40D10 |
| 40 | 11 | 41 | 46 | ER40D11 |
| 40 | 12 | 41 | 46 | ER40D12 |
| 40 | 13 | 41 | 46 | ER40D13 |
| 40 | 14 | 41 | 46 | ER40D14 |
| 40 | 15 | 41 | 46 | ER40D15 |
| 40 | 16 | 41 | 46 | ER40D16 |
| 40 | 17 | 41 | 46 | ER40D17 |
| 40 | 18 | 41 | 46 | ER40D18 |
| 40 | 19 | 41 | 46 | ER40D19 |
| 40 | 20 | 41 | 46 | ER40D20 |
| 40 | 21 | 41 | 46 | ER40D21 |
| 40 | 22 | 41 | 46 | ER40D22 |
| 40 | 23 | 41 | 46 | ER40D23 |
| 40 | 24 | 41 | 46 | ER40D24 |
| 40 | 25 | 41 | 46 | ER40D25 |
| 40 | 26 | 41 | 46 | ER40D26 |

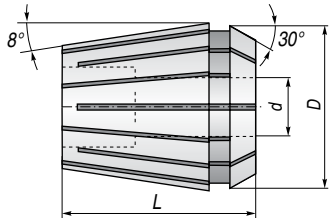

| ER | Zakres Range | Ilość sztuk Collets quantity | Kod/Code |
|---|---|---|---|
| ER16 | 3-10 | 8 | ER16 KPL.8TUL |
| ER20 | 3-13 | 11 | ER20.KPL.11TUL |
| ER25 | 3-16 | 14 | ER25.KPL.14TUL |
| ER32 | 3-20 | 18 | ER32.KPL.18TUL |
| ER40 | 3-26 | 24 | ER40.KPL.24TUL |

DIN 2080

## TYP/TYPE ISO-ER-KPL 7616

| 7:24 | ER | A | Zakres Range | Ilość sztuk Full set | Kod/Code |
|---|---|---|---|---|---|
| 30 | ER16 | 50 | 3-10 | 8 | ISO30.A50.ER16.KP8 |
| 30 | ER32 | 50 | 3-20 | 18 | ISO30.A50.ER32.KP18 |
| 40 | ER25 | 60 | 3-16 | 14 | ISO40.A60.ER25.KP14 |
| 40 | ER32 | 60 | 3-20 | 18 | ISO40.A60.ER32.KP18 |
| 40 | ER32 | 60 | 6-20 | 8 | ISO40.A60.ER32.KP8 |
| 40 | ER32 | 130 | 3-20 | 18 | ISO40.A130.ER32.KP18 |
| 40 | ER40 | 60 | 3-26 | 24 | ISO40.A60.ER40.KP24 |
| 50 | ER32 | 70 | 3-20 | 18 | ISO50.A70.ER32.KP18 |
| 50 | ER32 | 70 | 6-20 | 8 | ISO50.A70.ER32.KP8 |
| 50 | ER32 | 130 | 3-20 | 18 | ISO50.A130.ER32.KP18 |
| 50 | ER40 | 70 | 3-26 | 24 | ISO50.A70.ER40.KP24 |
| 50 | ER40 | 70 | 6-25 | 8 | ISO50.A70.ER40.KP8 |
| 50 | ER40 | 130 | 3-26 | 24 | ISO50.A130.ER40.KP24 |

Skład kompletu w kasecie drewnianej:
oprawka z nakrętką, komplet tulejek, klucz

## TYP/TYPE ISO-KPL

| 7:24 | ER | A | Zakres Range | Ilość sztuk Full set | Kod/Code |
|---|---|---|---|---|---|
| 30 | ER16 | 100 | 2-10 | 8 | ISO40.A100.ER16.KP8S |
| 30 | ER16 | 150 | 2-10 | 8 | ISO40.A150.ER16.KP8S |
| 40 | ER16 | 100 | 2-10 | 8 | ISO50.A100.ER16.KP8S |
| 40 | ER16 | 150 | 2-10 | 8 | ISO50.A150.ER16.KP8S |

DIN 69871-A

## TYP/TYPE DIN-ER-KPL 7617

| 7:24 | ER | A | Zakres Range | Ilość sztuk Full set | Kod/Code |
|---|---|---|---|---|---|
| 30 | ER16 | 60 | 3-10 | 8 | DIN30.A60.ER16.KP8 |
| 30 | ER32 | 60 | 3-20 | 18 | DIN30.A60.ER32.KP18 |
| 40 | ER25 | 60 | 3-16 | 14 | DIN40.A60.ER25.KP14 |
| 40 | ER32 | 70 | 3-20 | 18 | DIN40.A70.ER32.KP18 |
| 40 | ER32 | 60 | 6-20 | 8 | DIN40.A70.ER32.KP8 |
| 40 | ER32 | 130 | 3-20 | 18 | DIN40.A130.ER32.KP18 |
| 40 | ER40 | 70 | 3-26 | 24 | DIN40.A70.ER40.KP24 |
| 50 | ER32 | 70 | 3-20 | 18 | DIN50.A70.ER32.KP18 |
| 50 | ER32 | 70 | 6-20 | 8 | DIN50.A70.ER32.KP8 |
| 50 | ER32 | 130 | 3-20 | 18 | DIN50.A130.ER32.KP18 |
| 50 | ER40 | 80 | 3-26 | 24 | DIN50.A80.ER40.KP24 |
| 50 | ER40 | 70 | 6-25 | 8 | DIN50.A80.ER40.KP8 |
| 50 | ER40 | 130 | 3-26 | 24 | DIN50.A130.ER40.KP24 |

Skład kompletu w kasecie drewnianej:
oprawka z nakrętką, komplet tulejek, klucz

## TYP/TYPE DIN-KPL

| 7:24 | ER | A | Zakres Range | Ilość sztuk Full set | Kod/Code |
|---|---|---|---|---|---|
| 40 | ER16 | 100 | 2-10 | 8 | DIN40.A100.ER16.KP8S |
| 40 | ER16 | 150 | 2-10 | 8 | DIN40.A150.ER16.KP8S |
| 50 | ER16 | 100 | 2-10 | 8 | DIN50.A100.ER16.KP8S |
| 50 | ER16 | 150 | 2-10 | 8 | DIN50.A150.ER16.KP8S |

MAS 403-BT

## TYP/TYPE BT-ER-KPL 7626

| 7:24 | ER | A | Zakres Range | Ilość sztuk Full set | Kod/Code |
|---|---|---|---|---|---|
| 30 | ER16 | 60 | 3-10 | 8 | BT30.A60.ER16.KP8 |
| 30 | ER32 | 60 | 3-20 | 18 | BT30.A60.ER32.KP18 |
| 40 | ER25 | 60 | 3-16 | 14 | BT40.A60.ER25.KP14 |
| 40 | ER32 | 70 | 3-20 | 18 | BT40.A70.ER32.KP18 |
| 40 | ER32 | 60 | 6-20 | 8 | BT40.A70.ER32.KP8 |
| 40 | ER32 | 130 | 3-20 | 18 | BT40.A130.ER32.KP18 |
| 40 | ER40 | 70 | 3-26 | 24 | BT40.A70.ER40.KP24 |
| 50 | ER32 | 70 | 3-20 | 18 | BT50.A70.ER32.KP18 |
| 50 | ER32 | 70 | 6-20 | 8 | BT50.A70.ER32.KP8 |
| 50 | ER32 | 130 | 3-20 | 18 | BT50.A130.ER32.KP18 |
| 50 | ER40 | 80 | 3-26 | 24 | BT50,A80.ER40.KP24 |
| 50 | ER40 | 70 | 6-25 | 8 | BT50.A80.ER40.KP8 |
| 50 | ER40 | 130 | 3-26 | 24 | BT50.A130.ER40.KP24 |

Skład kompletu w kasecie drewnianej:
oprawka z nakrętką, komplet tulejek, klucz

## TYP/TYPE BT-KPL

| 7:24 | ER | A | Zakres Range | Ilość sztuk Full set | Kod/Code |
|---|---|---|---|---|---|
| 30 | ER16 | 100 | 2-10 | 8 | BT40.A100.ER16.KP8S |
| 30 | ER16 | 150 | 2-10 | 8 | BT40.A150.ER16.KP8S |
| 40 | ER16 | 100 | 2-10 | 8 | BT50.A100.ER16.KP8S |
| 40 | ER16 | 150 | 2-10 | 8 | BT50.A150.ER16.KP8S |

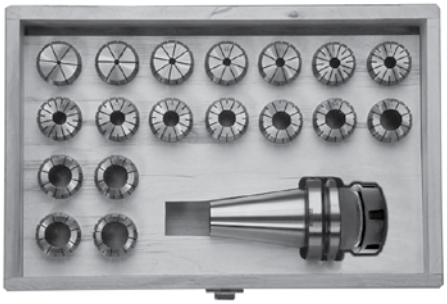

DIN 228

## TYP/TYPE MK-ER 7711

| MK | Collet Tulejka | A | Range Zakres | D | Waga/Weight kg | Kod/Code |
|---|---|---|---|---|---|---|
| 2 | ER16 | 63 | 3-10 | 32 | 0,35 | MK2.A63.ER16 |
| 2 | ER25 | 69 | 3-16 | 42 | 0,5 | MK2.A69.ER25 |
| 2 | ER32 | 74 | 3-20 | 50 | 0,6 | MK2.A74.ER32 |
| 3 | ER16 | 63 | 3-10 | 32 | 0,5 | MK3.A63.ER16 |
| 3 | ER25 | 69 | 3-16 | 42 | 0,65 | MK3.A69.ER25 |
| 3 | ER32 | 74 | 3-20 | 50 | 0,8 | MK3.A74.ER32 |
| 4 | ER25 | 82 | 3-16 | 42 | 0,75 | MK4.A82.ER25 |
| 4 | ER32 | 84 | 3-20 | 50 | 0,9 | MK4.A84.ER32 |
| 4 | ER40 | 73 | 3-26 | 63 | 1,05 | MK4.A73.ER40 |
| 5 | ER32 | 66 | 3-20 | 50 | 1,1 | MK5.A66.ER32 |
| 5 | ER40 | 68 | 3-26 | 63 | 1,25 | MK5.A68.ER40 |

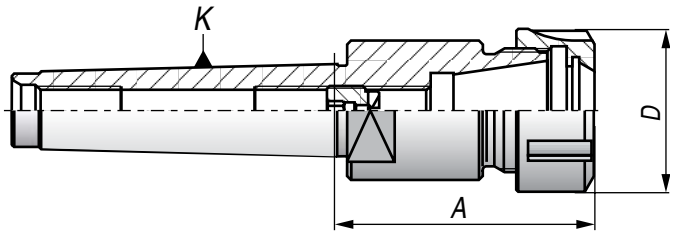


## OPRAWKI ZACISKOWE DO TULEJEK ER
## COLLET CHUCKS FOR ER COLLETS

DIN 1835

## TYP/TYPE D-ER 7815

| D | Tulejka | Zakres | L | $D_1$ | kg | Kod/Code |
|---|---|---|---|---|---|---|
| 25 | ER25 | 3-16 | 170 | 42 | 0,45 | D25.L170.ER25 |
| 25 | ER32 | 3-20 | 100 | 50 | 0,6 | D25.L100.ER32 |
| 25 | ER40 | 3-26 | 115 | 63 | 0,7 | D25.L115.ER40 |
| 32 | ER25 | 3-16 | 130 | 42 | 0,6 | D32.L130.ER25 |
| 32 | ER32 | 3-20 | 115 | 50 | 0.7 | D32.L115.ER32 |
| 32 | ER32 | 3-20 | 130 | 50 | 0,75 | D32.L130.ER32 |
| 32 | ER32 | 3-20 | 150 | 50 | 1,3 | D32.L150.ER32 |
| 40 | ER32 | 3-20 | 115 | 50 | 1,1 | D40.L115.ER32 |
| 40 | ER32 | 3-20 | 180 | 50 | 1,7 | D40.L180.ER32 |
| 40 | ER40 | 3-26 | 80 | 63 | 1,1 | D40.L080.ER40 |
| 40 | ER40 | 3-26 | 150 | 63 | 1,9 | D40.L150.ER40 |

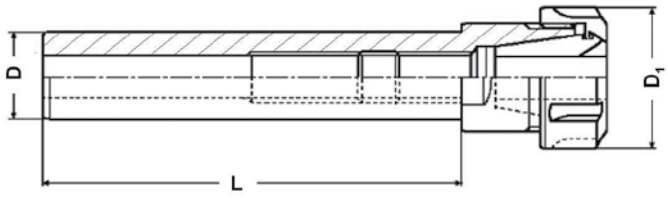


## TYP/TYPE D-ER 7812

| D | Tulejka | Zakres | L | $D_1$ | Kod/Code |
|---|---|---|---|---|---|
| 10 | ER11 | 1-7 | 100 | 16 | D10.L100.ER11M |
| 12 | ER11 | 1-7 | 100 | 16 | D12.L100.ER11M |
| 12 | ER11 | 1-7 | 140 | 16 | D12.L140.ER11M |
| 16 | ER11 | 1-7 | 100 | 16 | D16.L100.ER11M |
| 16 | ER11 | 1-7 | 130 | 16 | D16.L130.ER11M |
| 16 | ER11 | 1-7 | 160 | 16 | D16.L160.ER11M |
| 16 | ER16 | 2-10 | 80 | 22 | D16.L080.ER16M |
| 16 | ER16 | 2-10 | 100 | 22 | D16.L100.ER16M |
| 16 | ER16 | 2-10 | 160 | 22 | D16.L160.ER16M |
| 20 | ER16 | 2-10 | 100 | 22 | D20.L100.ER16M |
| 20 | ER16 | 2-10 | 130 | 22 | D20.L130.ER16M |
| 20 | ER16 | 2-10 | 160 | 22 | D20.L160.ER16M |
| 20 | ER16 | 2-10 | 200 | 22 | D20.L200.ER16M |
| 25 | ER25 | 3-16 | 160 | 35 | D25.L160.ER25M |

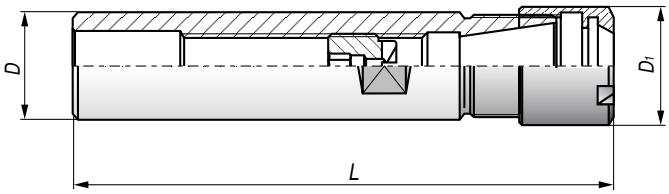

| PTEz | d | D | L | Kod/Code |
|---|---|---|---|---|
| 50 | 3 | 28,3 | 50 | PTEz50D3 |
| 50 | 4 | 28,3 | 50 | PTEz50D4 |
| 50 | 5 | 28,3 | 50 | PTEz50D5 |
| 50 | 6 | 28,3 | 50 | PTEz50D6 |
| 50 | 6,3 | 28,3 | 50 | PTEz50D6,3 |
| 50 | 7 | 28,3 | 50 | PTEz50D7 |
| 50 | 8 | 28,3 | 50 | PTEz50D8 |
| 50 | 9 | 28,3 | 50 | PTEz50D9 |
| 50 | 10 | 28,3 | 50 | PTEz50D10 |
| 50 | 11 | 28,3 | 50 | PTEz50D11 |
| 50 | 12 | 28,3 | 50 | PTEz50D12 |
| 50 | 13 | 28,3 | 50 | PTEz50D13 |
| 50 | 14 | 28,3 | 50 | PTEz50D14 |
| 50 | 15 | 28,3 | 50 | PTEz50D15 |
| 50 | 16 | 28,3 | 50 | PTEz50D16 |

| PTEz | d | D | L | Kod/Code |
|---|---|---|---|---|
| 50 | 17 | 28,3 | 50 | PTEz50D17 |
| 50 | 18 | 28,3 | 50 | PTEz50D18 |
| 50 | 19 | 28,3 | 50 | PTEz50D19 |
| 50 | 20 | 28,3 | 50 | PTEz50D20 |

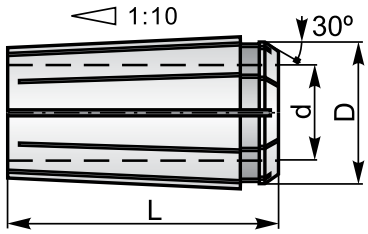


## OPRAWKI ZACISKOWE DO TULEJEK PTEz50 DO NARZĘDZI Z CHWYTEM WALCOWYM
## COLLETS CHUCKS FOR COLLETS PTEz50 FOR TOOLS WITH CYLINDRICAL SHANK

### TYP/TYPE MK-PTEz50

| MK | Collet Tulejka | A | Range Zakres | D | Waga/Weight kg | Kod/Code |
|---|---|---|---|---|---|---|
| 3 | PTEz50 | 70 | 3-20 | 58 | 0,8 | MK3.A70.PTEz50 |
| 4 | PTEz50 | 70 | 3-20 | 58 | 0,9 | MK4.A70.PTEz50 |

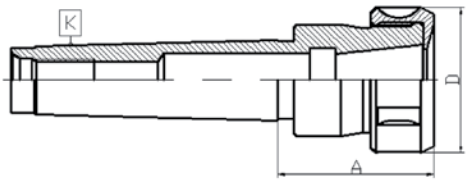


### TYP/TYPE ISO-PTEz50

| 7:24 | Collet Tulejka | A | Range Zakres | D | Waga/Weight kg | Kod/Code |
|---|---|---|---|---|---|---|
| ISO 40 | PTEz50 | 60 | 3-20 | 58 | 1,2 | ISO40.A60.PTEz50 |
| ISO 50 | PTEz50 | 70 | 3-20 | 58 | 3,2 | ISO50.A70.PTEz50 |

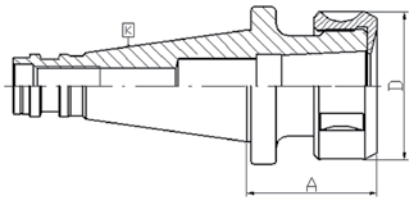


## KOMPLETY TULEJEK ZACISKOWYCH Z TRZPIENIEM W KASECIE DREWNIANEJ
## SET OF COLLETS WITH ADAPTER AND WRENCH TYPE IN WOODEN CASE

### TYP/TYPE ISO-PTEz-KPL

| 7:24 | PTEz | A | Zakres Range | Ilość sztuk Full set | Kod/Code |
|---|---|---|---|---|---|
| ISO 40 | PTEz50 | 60 | 6-20 | 8 | ISO40.A60.PTEz50.KPL8S |
| ISO 40 | PTEz50 | 60 | 3-20 | 18 | ISO40.A60.PTEz50.KPL18S |
| ISO 50 | PTEz50 | 70 | 3-20 | 8 | ISO50.A70.PTEz50.KPL8S |
| ISO 50 | PTEz50 | 70 | 6-20 | 18 | ISO50.A70.PTEz50.KPL18S |

Skład kompletu w kasecie drewnianej: oprawka z nakrętką, komplet tulejek, klucz

### TYP/TYPE MK-PTEz-KPL

| MK | PTEz | A | Zakres Range | Ilość sztuk Full set | Kod/Code |
|---|---|---|---|---|---|
| 3 | PTEz50 | 70 | 6-20 | 8 | MK3.A70.PTEz50.KPL8S |
| 3 | PTEz50 | 70 | 3-20 | 18 | MK3.A70.PTEz50.KPL18S |
| 4 | PTEz50 | 70 | 6-20 | 8 | MK4.A70.PTEz50.KPL8S |
| 4 | PTEz50 | 70 | 3-20 | 18 | MK4.A70.PTEz50.KPL18S |

Skład kompletu w kasecie drewnianej: oprawka z nakrętką, komplet tulejek, klucz

## TRZPIENIE FREZARSKIE Z ROWKIEM ZABIERAKOWYM I ROWKIEM WPUSTOWYM
## COMBINATION SHELL MILL ADAPTERS FOR CUTTERS WITH KEYWAY OR DRIVING SLOT DIN 138

### TYP/TYPE 7430

| K | d | A1 | $l_1$ | L | Waga/Weight kg | Kod/Code |
|---|---|---|---|---|---|---|
| MK3 | 16 | 53.0 | 27 | 17 | 0,68 | MK3.A53.D16C |
| MK3 | 22 | 51,0 | 31 | 19 | 0,70 | MK3.A51.D22C |
| MK3 | 27 | 51,0 | 33 | 21 | 1,0 | MK3.A51.D27C |
| MK3 | 32 | 49,0 | 38 | 24 | 1,25 | MK3.A49.D32C |
| MK4 | 16 | 59,5 | 27 | 17 | 1,08 | MK4.A59.D16C |
| MK4 | 22 | 57,5 | 31 | 19 | 1,15 | MK4.A57.D22C |
| MK4 | 27 | 57,5 | 33 | 21 | 1,37 | MK4.A57.D27C |
| MK4 | 32 | 55,5 | 38 | 24 | 1,70 | MK4.A55.D32C |

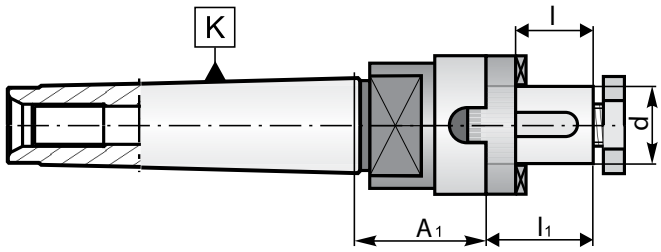


## TRZPIENIE FREZARSKIE DO FREZÓW NASADZANYCH Z ROWKIEM ZABIERAKOWYM DIN 138
## SHELL MILL ADAPTERS FOR CUTTERS WITH DRIVING SLOT DIN 138

### TYP/TYPE 7432

| K | d | $l_2$ | A | Kod/Code |
|---|---|---|---|---|
| MK2 | 16 | 17 | 25 | MK2.A25.D16S |
| MK2 | 22 | 19 | 25 | MK2.A25.D22S |
| MK2 | 27 | 21 | 25 | MK2.A25.D27S |
| MK3 | 16 | 17 | 25 | MK3.A25.D16S |
| MK3 | 22 | 19 | 25 | MK3.A25.D22S |
| MK3 | 27 | 21 | 25 | MK3.A25.D27S |
| MK3 | 32 | 24 | 25 | MK3.A25.D32S |
| MK4 | 16 | 17 | 25 | MK4.A25.D16S |
| MK4 | 22 | 19 | 25 | MK4.A25.D22S |
| MK4 | 27 | 21 | 25 | MK4.A25.D27S |
| MK4 | 32 | 24 | 25 | MK4.A25.D32S |
| MK4 | 40 | 27 | 26 | MK4.A25.D40S |

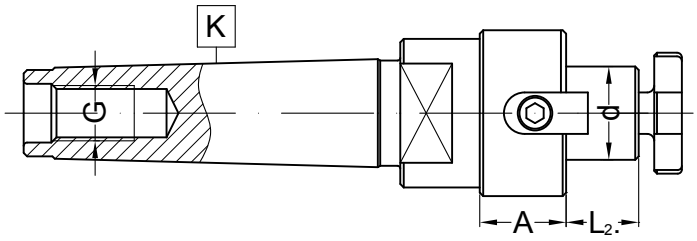


## TRZPIENIE DO FREZÓW Z OTWOREM GWINTOWYM NFE 62-516
## MORSE TAPER ARBORS WITH THREADED END NFE 62-516

### TYP/TYPE 7712

| K | d1 | M | L3 | D | L6 | L4 | Kod/Code |
|---|---|---|---|---|---|---|---|
| MK3 | 14 | M12 | 151 | 22 | 25 | 17 | MK3.D14.M12 |
| MK3 | 18 | M16 | 154 | 32 | 25 | 19 | MK3.D18.M16 |
| MK3 | 22 | M20 | 157 | 40 | 25 | 22 | MK3.D22.M20 |
| MK3 | 26 | M24 | 159 | 48 | 25 | 24 | MK3.D26.M24 |
| MK4 | 11 | M10 | 169 | 20 | 25 | 12 | MK4.D11.M10 |
| MK4 | 14 | M12 | 179 | 22 | 25 | 17 | MK4.D14.M12 |
| MK4 | 18 | M16 | 182 | 32 | 25 | 19 | MK4.D18.M16 |
| MK4 | 22 | M20 | 185 | 40 | 25 | 22 | MK4.D22.M20 |

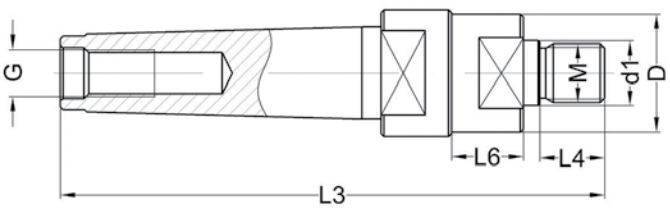

## TULEJE REDUKCYJNE PROSTE Z NAKRETKA ŚCIĄGAJACĄ
## MORSE SLEEVES WITH EJECTING NUT

### TYP/TYPE 1774

| K | K1 | L | Kod/Code |
|---|---|---|---|
| MK2 | MK1 | 82 | MK2.MK1.N |
| MK3 | MK1 | 101 | MK3.MK1.N |
| MK3 | MK2 | 101 | MK3.MK2.N |
| MK4 | MK1 | 127 | MK4.MK1.N |
| MK4 | MK2 | 127 | MK4.MK2.N |
| MK4 | MK3 | 127 | MK4.MK3.N |
| MK5 | MK3 | 157 | MK5.MK3.N |
| MK5 | MK4 | 157 | MK5.MK4.N |

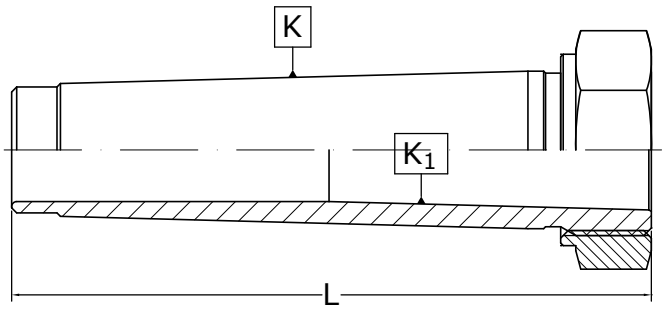


## TULEJE REDUKCYJNE ZE STOŻKIEM MORSA DIN 2185
## MORSE TAPER SLEEVES DIN 2185

### TYP/TYPE 1751

| K | K1 | L | Waga/Weight kg | Kod/Code |
|---|---|---|---|---|
| MK2 | MK1 | 92 | 0,1 | MK2.MK1.P |
| MK3 | MK1 | 99 | 0,21 | MK3.MK1.P |
| MK3 | MK2 | 112 | 0,18 | MK3.MK2.P |
| MK4 | MK1 | 124 | 0,5 | MK4.MK1.P |
| MK4 | MK2 | 124 | 0,45 | MK4.MK2.P |
| MK4 | MK3 | 140 | 0,38 | MK4.MK3.P |
| MK5 | MK3 | 156 | 1,15 | MK5.MK3.P |
| MK5 | MK4 | 174 | 1,00 | MK5.MK4.P |

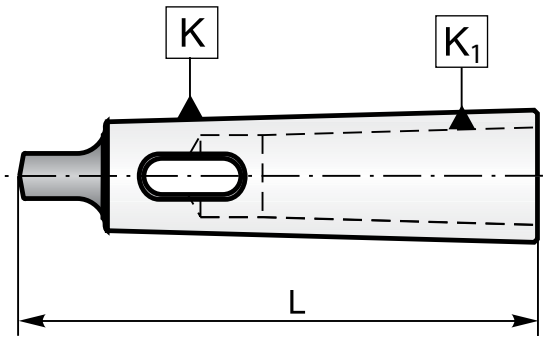


## TRZEPIENIE DO UCHWYTÓW WIERTARSKICH ZE STOŻKIEM DIN 238
## DRILL CHUCK ADAPTERS DIN 238

### TYP/TYPE MK-B 5361

| Morse | DIN | L | l | Waga/Weight kg | Kod/Code |
|---|---|---|---|---|---|
| 2 | B12 | 106,0 | 9,0 | 0,14 | MK2.L106.B12 |
| 2 | B16 | 112,0 | 8,0 | 0,16 | MK2.L112.B16 |
| 2 | B18 | 119,0 | 7,0 | 0,18 | MK2.L119.B18 |
| 3 | B12 | 127,0 | 11,0 | 0,28 | MK3.L127.B12 |
| 3 | B16 | 134,0 | 11,0 | 0,31 | MK3.L134.B16 |
| 3 | B18 | 140,0 | 9,0 | 0,33 | MK3.L140.B18 |
| 4 | B16 | 158,0 | 11,5 | 0,60 | MK4.L158.B16 |
| 4 | B18 | 166,5 | 12,0 | 0,63 | MK4.L166.B18 |
| 4 | B22 | 176,0 | 13,0 | 0,71 | MK4.L176.B22 |

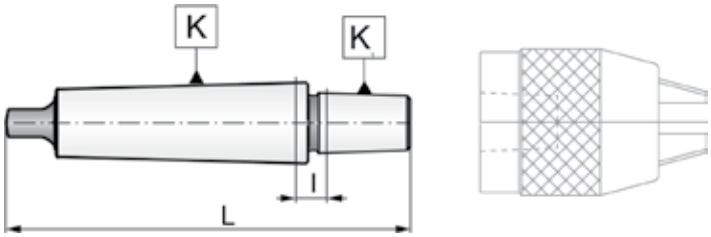

| Typ trzpienia/ Tape adapters | Kod/Code |
|---|---|
| SK 30 | TBK 30 |
| SK 40 | TBK 40 |
| SK 50 | TBK 50 |

## TYP TBAX40U

Podstawka montażowa uniwersalna do trzpieni ze stożkiem SK40; HSK63; DIN 2080; DIN 69871A; MAS 403-BT
Stabilna stalowa konstrukcja umożliwiająca kątowe ustawienie uzbrajanej oprawki. Daje to możliwość lepszego dostępu do narzędzia, oraz końcówki ściągającej oprawki.

| H | A | B | C | Waga/Weight kg |
|---|---|---|---|---|
| 162 | 170 | 64 | 142 | 6,1 |

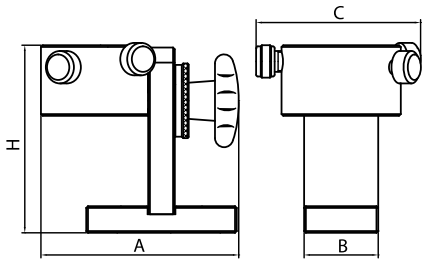

DIN 228

## TYP/TYPE KMK-P 8811

**Kieł tokarski obrotowy**
**Live centers for lathes**

Do toczenia i szlifowania.
Dokładność zapewniona dzięki zastosowaniu specjalnych tocznych łożysk wałeczkowych.
Stal stopowa, utwardzona i szlifowana.
Konstrukcja zamknięta, przeciwpyłowa.
Stożek Morse'a DIN 228.

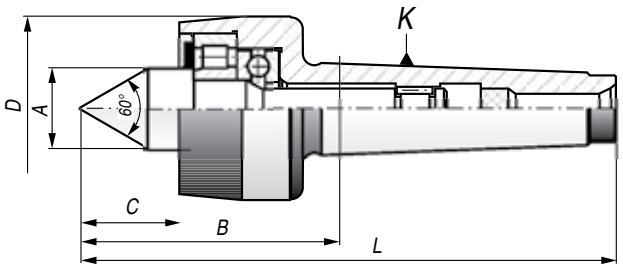


| Morse | A | B | C | D | L | Waga/Weight kg | Kod/Code |
|---|---|---|---|---|---|---|---|
| 2 | 18 | 56.5 | 22.0 | 40 | 120.5 | 0.40 | KMK2.A18.P |
| 3 | 25 | 75.0 | 28.5 | 56 | 156.0 | 0.95 | KMK3.A25.P |
| 4 | 28 | 81.5 | 31.5 | 64 | 184.0 | 1.58 | KMK4.A28.P |
| 5 | 41 | 107.5 | 45.0 | 85 | 237.0 | 3.60 | KMK5.A41.P |

| MK | Max obciążenie kg | Max obroty rpm / min |
|---|---|---|
| 2 | 200 | 5000 |
| 3 | 420 | 4000 |
| 4 | 600 | 2500 |
| 5 | 2000 | 2500 |

## TYP/TYPE KMK-D 8814

**Kieł tokarski obrotowy wydłużony**
**Live Centers for Lathes – long type**

For turning and grinding.
Accuracy guaranteed by the use of special bearings.
Alloy steel, hardened and ground.
Closed, anti-powder construction.
Morse taper DIN 228.

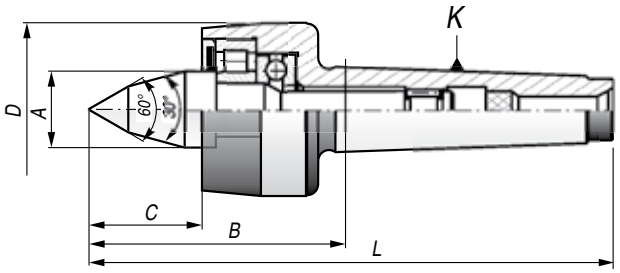


| Morse | A | B | C | D | L | Waga/Weight kg | Kod/Code |
|---|---|---|---|---|---|---|---|
| 2 | 18.0 | 72.5 | 33.0 | 40 | 136.5 | 0.41 | KMK2.A18,0.DŁ |
| 3 | 24.8 | 87.8 | 41.8 | 56 | 166.8 | 0.97 | KMK3.A24,8.DŁ |
| 4 | 28.0 | 98.3 | 48.8 | 64 | 200.8 | 1.61 | KMK4.A28,0.DŁ |
| 5 | 40.7 | 129.3 | 67.3 | 85 | 258.8 | 3.73 | KMK5.A40,7.DŁ |

| MK | Max obciążenie kg | Max obroty rpm / min |
|---|---|---|
| 2 | 200 | 5000 |
| 3 | 400 | 4000 |
| 4 | 800 | 2500 |
| 5 | 1600 | 2500 |

## OPRAWKI PŁYWAJĄCE DO ROZWIERTAKÓW Z PRZEPŁYWEM CHŁODZIWA
## COOLANT THRU FLOATING REAMER HOLDER

Oprawka dzięki swej konstrukcji umożliwia samoczynne, precyzyjne ustawienie rozwiertaka w osi obrabianego otworu.
Eliminuje możliwość uszkodzenia narzędzia, oraz gwarantuje poprawność obróbki.

The free-moving ball bearing drive, allows the existing drilled hole for high quality work.
Could be used for synchronized tapping operations on lathes and CNC machining centers.

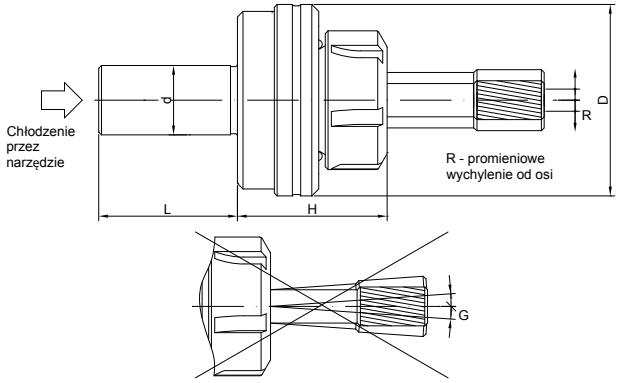


| Typ/Type | D | D | H | L | Gniazdo |
|---|---|---|---|---|---|
| D20 x 46 x ER20 | 20 | 50 | 50 | 46 | ER20 |
| D25 x 46 x ER20 | 25 | 50 | 50 | 46 | ER20 |
| D20 x 46 x ER25 | 20 | 57 | 53 | 46 | ER25 |
| D25 x 46 x ER25 | 25 | 57 | 53 | 46 | ER25 |
| D25 x 50 x ER32 | 25 | 69 | 58 | 50 | ER32 |
| D32 x 50 x ER32 | 32 | 69 | 58 | 50 | ER32 |

Kompensacja wzdłużna max 10 mm

## OPRAWKI KOMPENSACYJNE DO GWINTOWANIA
## FLOATING TAP HOLDER WITH ER-M COLLETS/LENGTH COMPENSATION ON TENSION ONLY

| Typ/Type | D | L | A | Gniazdo |
|---|---|---|---|---|
| PM20 x 80 x ER16 | 20 | 80 | 22 | ER16 |
| PM25 x 57 x ER20 | 25 | 57 | 35 | ER20 |
| PM25 x 57 x ER25 | 25 | 57 | 42 | ER25 |
| PM32 x 80 x ER32 | 32 | 80 | 50 | ER32 |

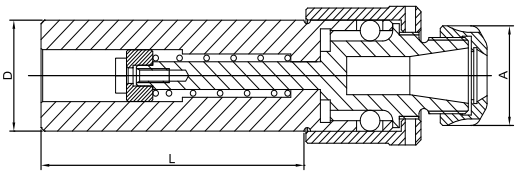

Max kompensacja do 10 mm

## USTAWIAKI FREZARSKIE
## MILING SETTERS

**TYP/TYPE UST** **1910**

Dokładność 0,005 mm
Opakowanie plastikowe

Accuracy 0,005 mm
Plastic box

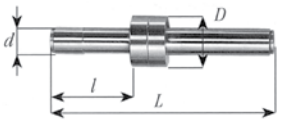


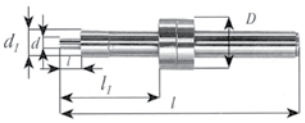


| Opis | D | d | $d_1$ | l | $l_1$ | L | Waga/Weight kg | Kod/Code |
|---|---|---|---|---|---|---|---|---|
| Ustawiak srednicy 10mm<br>Setter of dia. 10 mm | 19 | 10 | - | 30 | - | 82 | 0,04 | UST10.L82.K |
| Sprężynka 5 x 35 mm do ust. Δ 10<br>Spring 5 x 35 for set Δ 10 | | | | | | | - | UST10.L35.S5 |
| Ustawiak średnicy 10/4<br>Setter of dia. 10/4 mm | 19 | 4 | 10 | 8 | 37 | 90 | 0,06 | UST04.L90.K |
| Sprężynka do ustawiaka 10/4<br>Spring 5 x 35 for set. Δ 10/4 | | | | | | | - | UST04.L28.S6 |

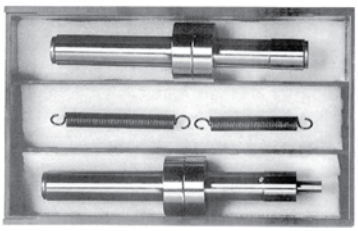

DIN 69872-A

## TYP/TYPE PS-DIN 9882

Końcówka kodu A - wykonanie z otworem przelotowym
Końcówka kodu B - wykonanie bez otworu

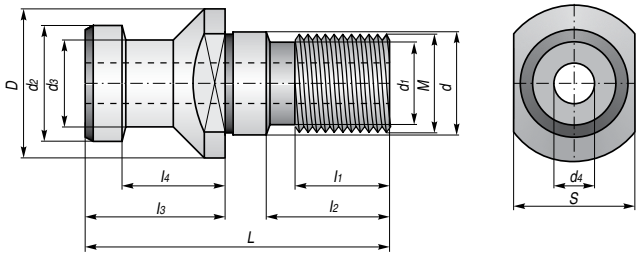


| 7:24 | L | D | d | d1 | d2 | d3 | d4 | M | L1 | L2 | L3 | L4 | S | Kod/Code |
|---|---|---|---|---|---|---|---|---|---|---|---|---|---|---|
| 30 | 44 | 17 | 18 | 10,0 | 11 | 9 | – | M12 | 10 | 15 | 24 | 19 | 14 | PS30.L43.DIN A/B |
| 40 | 54 | 23 | 17 | 13,5 | 19 | 14 | 7,0 | M16 | 15 | 21 | 26 | 20 | 19 | PS40.L54.DIN A/B |
| 45 | 65 | 30 | 21 | 16,0 | 23 | 17 | 9,5 | M20 | 21 | 27 | 30 | 23 | 24 | PS45.L65.DIN A/B |
| 50 | 74 | 36 | 25 | 20,0 | 28 | 21 | 11,5 | M24 | 23 | 30 | 34 | 25 | 30 | PS50.L74.DIN A/B |
| 60 | 90 | 52 | 32 | 26,0 | 40 | 30 | 14 | M30 | 31 | 38 | 40 | 30 | 46 | PS50.L90.DIN A/B |

MAS 403-BT B

## TYP/TYPE PS-BT 9883

Końcówka kodu A - wykonanie z otworem przelotowym
Końcówka kodu B - wykonanie bez otworu

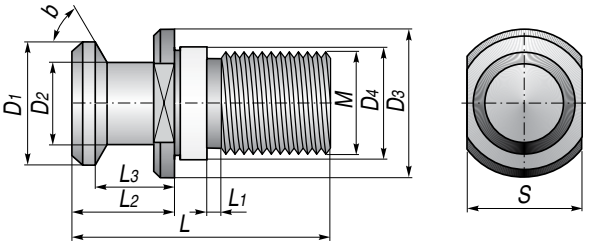


| 7:24 | L | b | M | L1 | L2 | L3 | D1 | D2 | D3 | D4 | S | Kod/Code |
|---|---|---|---|---|---|---|---|---|---|---|---|---|
| 30 | 43 | 45° | M16 | 4 | 35 | 28 | 15 | 10 | 23 | 17 | 19 | PS30.L43.K45.BT A/B |
| 40 | 60 | 45° | M16 | 4 | 35 | 28 | 15 | 10 | 23 | 17 | 19 | PS40.L60.K45.BT A/B |
| 40 | 60 | 60° | M16 | 4 | 35 | 28 | 15 | 10 | 23 | 17 | 19 | PS40.L60.K60.BT A/B |
| 40 | 60 | 90° | M16 | 4 | 35 | 28 | 15 | 10 | 23 | 17 | 19 | PS40.L60.K90.BT A/B |
| 40 | 120 | 45° | M12 | 64 | 35 | 28 | 15 | 10 | 23 | 17 | 19 | PS40.L120.K45.BT A/B |
| 40 | 120 | 60° | M12 | 64 | 35 | 28 | 15 | 10 | 23 | 17 | 19 | PS40.L120.K60.BT A/B |
| 40 | 125 | 45° | M16 | 69 | 35 | 28 | 15 | 10 | 23 | 17 | 19 | PS40.L125,K45.BT A/B |
| 40 | 125 | 60° | M16 | 69 | 35 | 28 | 15 | 10 | 23 | 17 | 19 | PS40.L125.K60.BT A/B |
| | | | | | | | | | | | | PS40.L57.K45.BT A/B |
| 50 | 85 | 45° | M24 | 8 | 45 | 35 | 23 | 17 | 38 | 25 | 30 | PS50.L85.K45.BT A/B |
| 50 | 85 | 60° | M24 | 8 | 45 | 35 | 23 | 17 | 38 | 25 | 30 | PS50.L85.K60.BT A/B |
| 50 | 85 | 90° | M24 | 8 | 45 | 35 | 23 | 17 | 38 | 25 | 30 | PS50.L85.K90.BT A/B |
| 50 | 125 | 45° | M24 | 48 | 45 | 35 | 23 | 17 | 38 | 25 | 30 | PS50.L125.K45.BT A/B |
| 50 | 125 | 60° | M24 | 48 | 45 | 35 | 23 | 17 | 38 | 25 | 30 | PS50.L125.K60.BT A/B |
| 50 | 125 | 90° | M24 | 48 | 45 | 35 | 23 | 17 | 38 | 25 | 30 | PS50.L125.K90.BT A/B |

## TYP/TYPE PS-MA (MAZAK) 9885

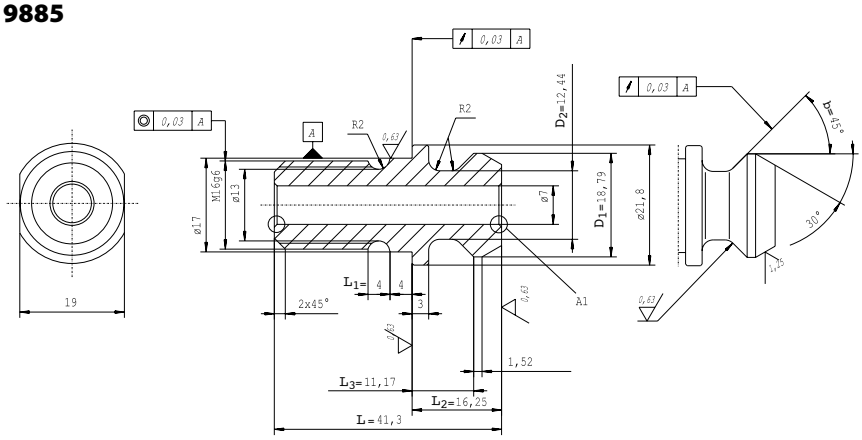


| 7:24 | L | b | M | L1 | L2 | L3 | D1 | D2 | D3 | D4 | S | Kod/Code |
|---|---|---|---|---|---|---|---|---|---|---|---|---|
| 40 | 41,25 | 45° | M16 | 4 | 16,25 | 11,17 | 18,8 | 12,4 | – | – | – | PS40.L41,25.MA |

## NAKRĘTKA
## ER CLAMPING NUTS

**9833**

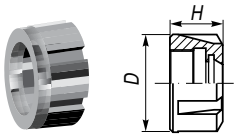


Typ/Type N.ER.S

| Tulejka Collet | DIN 6499 | D | H | Kod/Code |
|---|---|---|---|---|
| ER16 | D16 | 32 | 17,5 | N.ER16.S |
| ER20 | D20 | 35 | 19,0 | N.ER20.S |
| ER25 | D25 | 42 | 20,0 | N.ER25.S |
| ER32 | D32 | 50 | 22,5 | N.ER32.S |
| ER40 | D40 | 63 | 25,5 | N.ER40.S |

Typ/Type N.ER.SW

**9833-D**

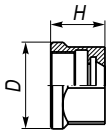


| Tulejka Collet | D | H | Kod/Code |
|---|---|---|---|
| ER16 | 28 | 17,5 | N.ER16.SW |

Typ/Type N.ER.MINI

**9833-S**

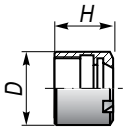


| Tulejka Collet | D | H | Kod/Code |
|---|---|---|---|
| ER16 | 22 | 18 | N.ER16.MINI |

Typ/Type N.PTEZ-50

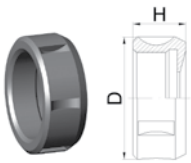


| Tulejka Collet | D | H | Kod/Code |
|---|---|---|---|
| PTEz-50 | 58 | 25 | N.PTEz-50 |

## ŚRUBA KRZYŻOWA
## LOCKING SCREW

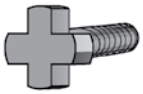

Otwór/Hole

| Δ | M | l | d | L | Kod/Code |
|---|---|---|---|---|---|
| 16 | M8 | 16 | 20 | 22 | SR.08.K |
| 22 | M10 | 18 | 28 | 25 | SR.10.K |
| 27 | M12 | 22 | 35 | 30 | SR.12.K |
| 32 | M16 | 26 | 42 | 35 | SR.16.K |
| 40 | M20 | 30 | 52 | 40 | SR.20.K |
| 50 | M24 | 36 | 63 | 48 | SR.24.K |

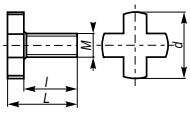


## ZABIERAK
## DRIVE KEY

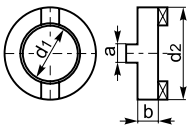


| d1 | d2 | a | b | Kod/Code |
|---|---|---|---|---|
| 16 | 32 | 8 | 10 | ZAB.16K |
| 22 | 40 | 10 | 12 | ZAB.22K |
| 27 | 48 | 12 | 12 | ZAB.27K |
| 32 | 58 | 14 | 14 | ZAB.32K |
| 40 | 70 | 16 | 14 | ZAB.40K |
| 50 | 90 | 18 | 16 | ZAB.50K |

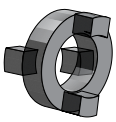

## KLUCZE DO OPRAW
## COLLET CHUCK WRENCHES

### STANDARD I

| Collet | L | Kod/Code |
|---|---|---|
| ER16 | 158 | CH16H |
| ER20 | 158 | CH20H |
| ER25 | 183 | CH25H |
| ER32 | 204 | CH32H |
| ER40 | 252 | CH40H |

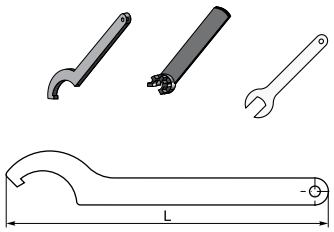


### STANDARD I
### HEXA

| Collet | L | Kod/Code |
|---|---|---|
| ER16 | 170 | CH16SE |

### SPEZIAL/SPECIAL MINI

| Collet | L | Kod/Code |
|---|---|---|
| ER11 | 95 | CH11SM |
| ER16 | 119 | CH16SM |
| ER25 | 135 | CH25SM |

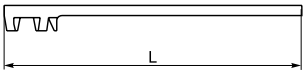


### STANDARD II

| Collet | L | Kod/Code |
|---|---|---|
| ER25 | 200 | CH25S |
| ER32 | 250 | CH32S |
| ER40 | 280 | CH40S |

## Typ B1 1114P

**prawa, krótka / right hand, short**

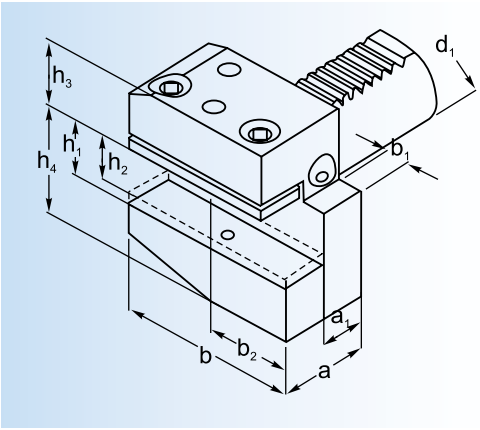


| Typ – wielkość<br>Type – Dimension | $d_1$ | a | $a_1$ | b | $b_1$ | $b_2$ | $h_1$ | $h_2$ | $h_3$ | $h_4$ |
|---|---|---|---|---|---|---|---|---|---|---|
| **B1.D20.H16** | 20 | 30 | 16 | 55 | 7 | 30 | 16 | 12 | 25 | 30 |
| **B1.D30.H20** | 30 | 40 | 22 | 70 | 10 | 35 | 20 | 16 | 28 | 38 |
| **B1.D40.H25** | 40 | 44 | 22 | 85 | 12,5 | 42,5 | 25 | 20 | 32,5 | 48 |
| **B1.D50.H32** | 50 | 55 | 30 | 100 | 16 | 50 | 32 | 25 | 35 | 60 |

## Typ B2 1114L

**lewa, krótka / left hand, short**

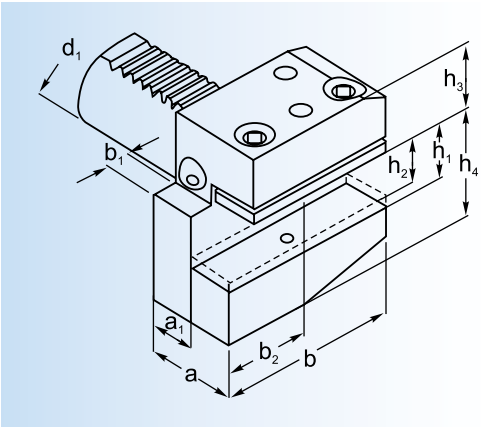


| Typ – wielkość<br>Type – Dimension | $d_1$ | a | $a_1$ | b | $b_1$ | $b_2$ | $h_1$ | $h_2$ | $h_3$ | $h_4$ |
|---|---|---|---|---|---|---|---|---|---|---|
| **B2.D20.H16** | 20 | 30 | 16 | 55 | 7 | 30 | 16 | 12 | 25 | 30 |
| **B2.D30.H20** | 30 | 60 | 42 | 70 | 10 | 35 | 20 | 16 | 28 | 38 |
| **B2.D40.H25** | 40 | 44 | 22 | 85 | 12,5 | 42,5 | 25 | 20 | 32,5 | 48 |
| **B2.D50.H32** | 50 | 55 | 30 | 100 | 16 | 50 | 32 | 25 | 35 | 60 |

## Typ B3 1115P

**odwrócona, prawa, krótka /**
**right hand short, inverted**

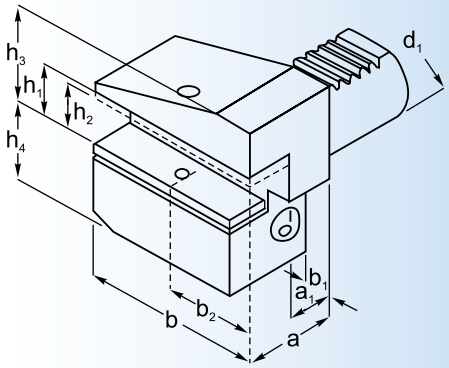


| Typ – wielkość<br>Type – Dimension | $d_1$ | a | $a_1$ | b | $b_1$ | $b_2$ | $h_1$ | $h_2$ | $h_3$ | $h_4$ |
|---|---|---|---|---|---|---|---|---|---|---|
| **B3.D20.H16** | 20 | 30 | 16 | 55 | 7 | 30 | 16 | 12 | 30 | 25 |
| **B3.D30.H20** | 30 | 40 | 22 | 70 | 10 | 35 | 20 | 16 | 38 | 35 |
| **B3.D40.H25** | 40 | 44 | 22 | 85 | 12,5 | 42,5 | 25 | 20 | 48 | 42,5 |
| **B3.D50.H32** | 50 | 55 | 30 | 100 | 16 | 50 | 32 | 24 | 60 | 50 |

## Typ B4 1115L

**odwrócona, lewa, krótka /**
**left hand short, inverted**

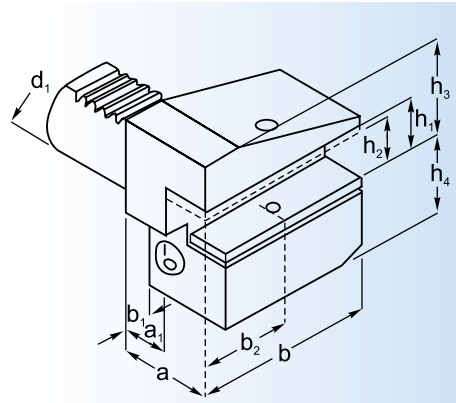


| Typ – wielkość<br>Type – Dimension | $d_1$ | a | $a_1$ | b | $b_1$ | $b_2$ | $h_1$ | $h_2$ | $h_3$ | $h_4$ |
|---|---|---|---|---|---|---|---|---|---|---|
| **B4.D20.H16** | 20 | 30 | 16 | 55 | 7 | 30 | 16 | 12 | 30 | 25 |
| **B4.D30.H20** | 30 | 40 | 22 | 70 | 10 | 35 | 20 | 16 | 38 | 35 |
| **B4.D40.H25** | 40 | 44 | 22 | 85 | 12,5 | 42,5 | 25 | 20 | 48 | 42,5 |
| **B4.D50.H32** | 50 | 55 | 30 | 100 | 16 | 50 | 32 | 24 | 60 | 50 |

## Typ C1 1133P
**prawa / right hand**

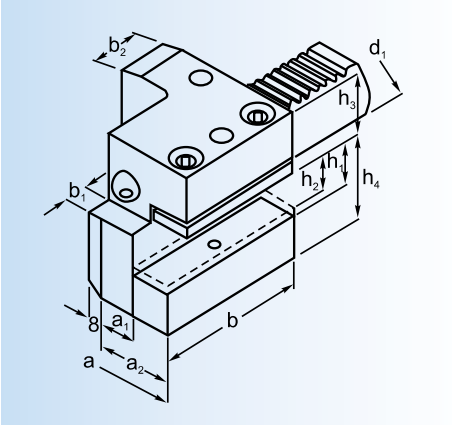


| Typ – wielkość<br>Type – Dimension | $d_1$ | a | $a_1$ | $a_2$ | b | $b_1$ | $b_2$ | $h_1$ | $h_2$ | $h_3$ | $h_4$ |
|---|---|---|---|---|---|---|---|---|---|---|---|
| **C1.D20.H16** | 20 | 65 | 26 | 40 | 50 | - | 30 | 16 | 12 | 25 | 30 |
| **C1.D30.H20** | 30 | 70 | 17 | 35 | 70 | 10 | 30 | 20 | 16 | 28 | 38 |
| **C1.D40.H25** | 40 | 85 | 21 | 42,5 | 85 | 12,5 | 30 | 25 | 20 | 32,5 | 48 |
| **C1.D50.H32** | 50 | 100 | 26 | 50 | 100 | 16 | 40 | 32 | 25 | 35 | 60 |

## Typ C2 1133L
**lewa / left hand**

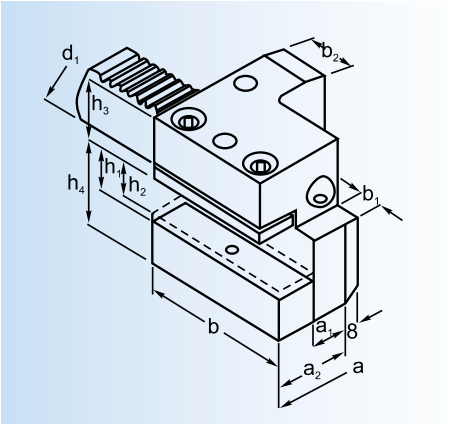


| Typ – wielkość<br>Type – Dimension | $d_1$ | a | $a_1$ | $a_2$ | b | $b_1$ | $b_2$ | $h_1$ | $h_2$ | $h_3$ | $h_4$ |
|---|---|---|---|---|---|---|---|---|---|---|---|
| **C2.D20.H16** | 20 | 65 | 26 | 40 | 0 | - | 30 | 16 | 12 | 25 | 30 |
| **C2.D30.H20** | 30 | 76 | 23 | 41 | 70 | 10 | 30 | 20 | 16 | 28 | 38 |
| **C2.D40.H25** | 40 | 90 | 25,5 | 47,5 | 85 | 12,5 | 30 | 25 | 20 | 32,5 | 48 |
| **C2.D50.H32** | 50 | 105 | 30,5 | 55 | 100 | 16 | 40 | 32 | 25 | 35 | 60 |

## Typ C3 1134P

**odwrócona prawa /**
**right hand, inverted**

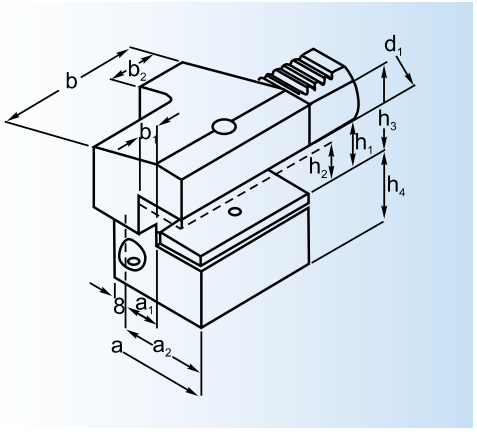


| Typ – wielkość<br>Type – Dimension | $d_1$ | a | $a_1$ | $a_2$ | b | $b_1$ | $b_2$ | $h_1$ | $h_2$ | $h_3$ | $h_4$ |
|---|---|---|---|---|---|---|---|---|---|---|---|
| **C3.D20.H16** | 20 | 65 | 26 | 40 | 50 | - | 30 | 16 | 12 | 30 | 25 |
| **C3.D30.H20** | 30 | 70 | 17 | 35 | 70 | 10 | 30 | 20 | 16 | 38 | 35 |
| **C3.D40.H25** | 40 | 85 | 21 | 42,5 | 85 | 12,5 | 30 | 25 | 20 | 44 | 42,5 |
| **C3.D50.H32** | 50 | 100 | 26 | 50 | 100 | 16 | 40 | 32 | 25 | 60 | 50 |

## Typ C4 1134L

**odwrócona lewa /**
**left hand, inverted**

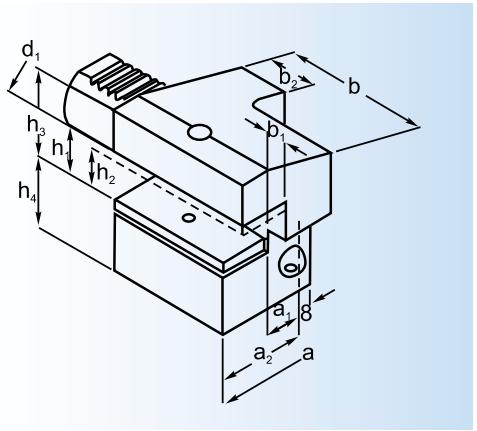


| Typ – wielkość<br>Type – Dimension | $d_1$ | a | $a_1$ | $a_2$ | b | $b_1$ | $b_2$ | $h_1$ | $h_2$ | $h_3$ | $h_4$ |
|---|---|---|---|---|---|---|---|---|---|---|---|
| **C4.D20.H16** | 20 | 65 | 26 | 40 | 50 | - | 30 | 16 | 12 | 30 | 25 |
| **C4.D30.H20** | 30 | 76 | 23 | 41 | 70 | 10 | 30 | 20 | 16 | 38 | 35 |
| **C4.D40.H25** | 40 | 90 | 25,5 | 47,5 | 85 | 12,5 | 30 | 25 | 20 | 48 | 42,5 |
| **C4.D50.H32** | 50 | 105 | 30,5 | 55 | 100 | 16 | 40 | 32 | 25 | 60 | 50 |

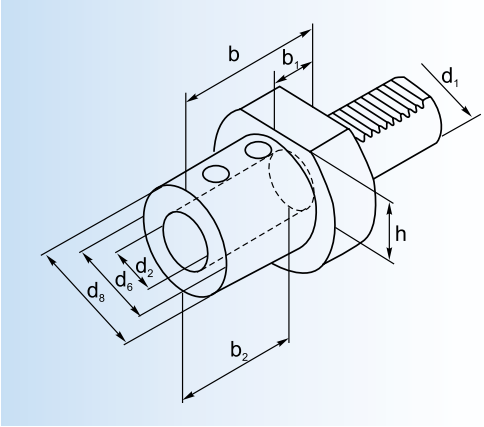


## Typ E1 1254P

**do narzędzi z chłodzeniem wewnętrznym**
**with internal coolant only**

| Typ – wielkość<br>Type – Dimension | $d_1$ | $d_2$ | $d_6$ | $d_8$ | b | $b_1$ | $b_2$ | h |
|---|---|---|---|---|---|---|---|---|
| **E1.D20.WE16** | 20 | 16 | 36 | 50 | 67 | 18 | 54 | – |
| **E1.D20.WE20** | 20 | 20 | 40 | 50 | 67 | 18 | 54 | – |
| **E1.D20.WE25** | 20 | 25 | 45 | 50 | 71 | 18 | 59 | – |
| **E1.D30.WE16** | 30 | 16 | 36 | 68 | 67 | 22 | 54 | 28 |
| **E1.D30.WE20** | 30 | 20 | 40 | 68 | 67 | 22 | 54 | 28 |
| **E1.D30.WE25** | 30 | 25 | 45 | 68 | 71 | 22 | 59 | 28 |
| **E1.D30.WE32** | 30 | 32 | 52 | 68 | 75 | 22 | 63 | 28 |
| **E1.D40.WE10** | 40 | 10 | 35 | 83 | 67 | 22 | 41 | 32,5 |
| **E1.D40.WE16** | 40 | 16 | 36 | 83 | 67 | 22 | 54 | 32,5 |
| **E1.D40.WE20** | 40 | 20 | 40 | 83 | 67 | 22 | 54 | 32,5 |
| **E1.D40.WE25** | 40 | 25 | 45 | 83 | 75 | 22 | 59 | 32,5 |
| **E1.D40.WE32** | 40 | 32 | 52 | 83 | 75 | 22 | 63 | 32,5 |
| **E1.D40.WE40** | 40 | 40 | 60 | 83 | 90 | 22 | 73 | 32,5 |
| **E1.D50.WE12** | 50 | 12 | 40 | 98 | 145 | 30 | 54 | 35 |
| **E1.D50.WE16** | 50 | 16 | 40 | 98 | 145 | 30 | 54 | 35 |
| **E1.D50.WE20** | 50 | 20 | 40 | 98 | 67 | 30 | 54 | 35 |
| **E1.D50.WE25** | 50 | 25 | 45 | 98 | 80 | 30 | 59 | 35 |
| **E1.D50.WE32** | 50 | 32 | 52 | 98 | 80 | 30 | 63 | 35 |
| **E1.D50.WE40** | 50 | 40 | 60 | 98 | 90 | 30 | 73 | 35 |
| **E1.D50.WE50** | 50 | 50 | 70 | 98 | 100 | 30 | 83 | 35 |

## Typ E2 1258

**dla narzędzi z chwytem cylindrycznym**
**for tools with cylindrical shank**

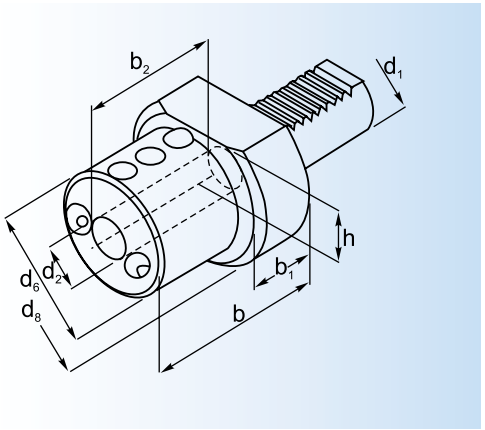


| Typ – wielkość<br>Type – Dimension | $d_1$ | $d_2$ | $d_6$ | $d_8$ | b | $b_1$ | $b_2$ | h |
|---|---|---|---|---|---|---|---|---|
| **E2.D20.WE08** | 20 | 8 | 40 | 50 | 50 | 18 | 41 | – |
| **E2.D20.WE10** | 20 | 10 | 40 | 50 | 50 | 18 | 41 | – |
| **E2.D20.WE12** | 20 | 12 | 40 | 50 | 50 | 18 | 41 | – |
| **E2.D20.WE16** | 20 | 16 | 40 | 50 | 50 | 18 | 41 | – |
| **E2.D20.WE20** | 20 | 20 | 50 | 50 | 50 | 18 | 41 | – |
| **E2.D20.WE25** | 20 | 25 | 50 | 50 | 60 | 18 | 51 | – |
| **E2.D30.WE08** | 30 | 8 | 55 | 68 | 60 | 22 | 51 | 28 |
| **E2.D30.WE10** | 30 | 10 | 55 | 68 | 60 | 22 | 51 | 28 |
| **E2.D30.WE12** | 30 | 12 | 55 | 68 | 60 | 22 | 51 | 28 |
| **E2.D30.WE16** | 30 | 16 | 55 | 68 | 60 | 22 | 51 | 28 |
| **E2.D30.WE20** | 30 | 20 | 55 | 68 | 60 | 22 | 51 | 28 |
| **E2.D30.WE25** | 30 | 25 | 55 | 68 | 60 | 22 | 51 | 28 |
| **E2.D30.WE30** | 30 | 30 | 68 | 68 | 75 | 22 | 51 | 28 |
| **E2.D30.WE32** | 30 | 32 | 68 | 68 | 75 | 22 | 61 | 28 |
| **E2.D40.WE08** | 40 | 8 | 50 | 83 | 75 | 22 | 61 | 32,5 |
| **E2.D40.WE10** | 40 | 10 | 50 | 83 | 75 | 22 | 61 | 32,5 |
| **E2.D40.WE12** | 40 | 12 | 50 | 83 | 75 | 22 | 61 | 32,5 |
| **E2.D40.WE16** | 40 | 16 | 55 | 83 | 75 | 22 | 61 | 32,5 |
| **E2.D40.WE20** | 40 | 20 | 55 | 83 | 75 | 22 | 61 | 32,5 |
| **E2.D40.WE25** | 40 | 25 | 60 | 83 | 75 | 22 | 61 | 32,5 |
| **E2.D40.WE30** | 40 | 30 | 72 | 83 | 75 | 22 | 61 | 32,5 |
| **E2.D40.WE32** | 40 | 32 | 72 | 83 | 75 | 22 | 61 | 32,5 |
| **E2.D40.WE40** | 40 | 40 | 83 | 83 | 90 | 22 | 76 | 32,5 |
| **E2.D50.WE10** | 50 | 10 | 50 | 98 | 75 | 30 | 62 | 35 |
| **E2.D50.WE12** | 50 | 12 | 56 | 98 | 90 | 30 | 76 | 35 |
| **E2.D50.WE16** | 50 | 16 | 56 | 98 | 90 | 30 | 76 | 35 |
| **E2.D50.WE20** | 50 | 20 | 56 | 98 | 90 | 30 | 76 | 35 |
| **E2.D50.WE25** | 50 | 25 | 65 | 98 | 90 | 30 | 76 | 35 |
| **E2.D50.WE30** | 50 | 30 | 68 | 98 | 90 | 30 | 76 | 35 |
| **E2.D50.WE32** | 50 | 32 | 68 | 98 | 90 | 30 | 76 | 35 |
| **E2.D50.WE40** | 50 | 40 | 80 | 98 | 90 | 30 | 76 | 35 |
| **E2.D50.WE50** | 50 | 50 | 90 | 98 | 100 | 30 | 86 | 35 |

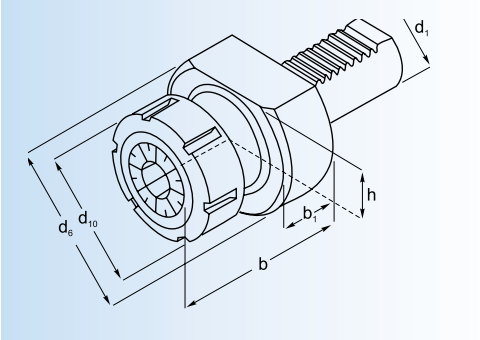


OPRAWKA DO TULEJEK WEDŁUG DIN 6499
TOOLHOLDER FOR COLLETS ER TYPE ACCORDING TO DIN 6499

## Typ E4 1220

**ze standardową nakrętką typu 9833**
**with standard nut type 9833**

| Typ – wielkość<br>Type – Dimension | $d_1$ | $d_6$ | $d_{10}$ | b | $b_1$ | h | ER<br>Ø | Bereich/Range mm |
|---|---|---|---|---|---|---|---|---|
| **E4.D20.ER25** | 20 | 50 | 42 | 50 | 18 | – | 25 | 2-16 |
| **E4.D20.ER32** | 20 | 50 | 50 | 62 | 18 | – | 32 | 2-20 |
| **E4.D30.ER25** | 30 | 68 | 42 | 57 | 22 | 28 | 25 | 2-16 |
| **E4.D30.ER25D** | 30 | 68 | 42 | 75 | 34 | 28 | 25 | 2-16 |
| **E4.D30.ER32** | 30 | 68 | 50 | 55 | 22 | 28 | 32 | 2-20 |
| **E4.D30.ER32D** | 30 | 68 | 50 | 75 | 29 | 28 | 32 | 2-20 |
| **E4.D30.ER40** | 30 | 68 | 63 | 70 | 26 | 28 | 40 | 3-26 |
| **E4.D40.ER25** | 40 | 83 | 42 | 69 | 22 | 32,5 | 25 | 2-16 |
| **E4.D40.ER32** | 40 | 83 | 50 | 62 | 22 | 32,5 | 32 | 2-20 |
| **E4.D40.ER40** | 40 | 83 | 63 | 75 | 22 | 32,5 | 40 | 3-26 |
| **E4.D50.ER32** | 50 | 98 | 50 | 84 | 30 | 35 | 32 | 2-20 |
| **E4.D50.ER40** | 50 | 98 | 63 | 75 | 30 | 35 | 40 | 3-26 |

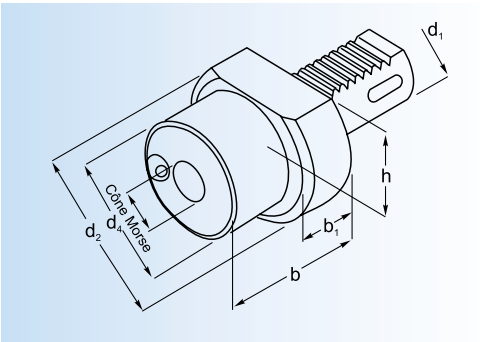


OPRAWKA DO NARZĘDZI Z CHWYTEM MORSE'A
WG DIN 228A I DIN 228B
TOOLHOLDERS FOR MORSE TAPER SHANKS
ACCORDING TO DIN 228A AND DIN 228B

## Typ F1N 1224

| Typ – wielkość<br>Type – dimension | $d_1$ | Cône Morse | $d_2$ | $d_4$ | b | $b_1$ | h |
|---|---|---|---|---|---|---|---|
| **F1.D20.MK1** | 20 | 1 | 50 | – | 27 | – | – |
| **F1.D30.MK1** | 30 | 1 | 68 | 68 | 27 | – | 28 |
| **F1.D30.MK2** | 30 | 2 | 68 | 58 | 36 | 25 | 28 |
| **F1.D30.MK3** | 30 | 3 | 68 | 68 | 66 | – | 28 |
| **F1.D40.MK2** | 40 | 2 | 83 | 55 | 36 | 22 | 32,5 |
| **F1.D40.MK3** | 40 | 3 | 83 | 58 | 50 | 22 | 32,5 |
| **F1.D40.MK4** | 40 | 4 | 83 | 68 | 80 | 22 | 32,5 |
| **F1.D50.MK2** | 50 | 2 | 98 | 55 | 36 | 30 | 35 |
| **F1.D50.MK3** | 50 | 3 | 98 | 58 | 45 | 30 | 35 |
| **F1.D50.MK4** | 50 | 4 | 98 | 68 | 55 | 30 | 35 |

## Typ 1276

OPRAWKA Z UCHWYTEM WIERTARSKIM
DRILL CHUCK TOOLHOLDER

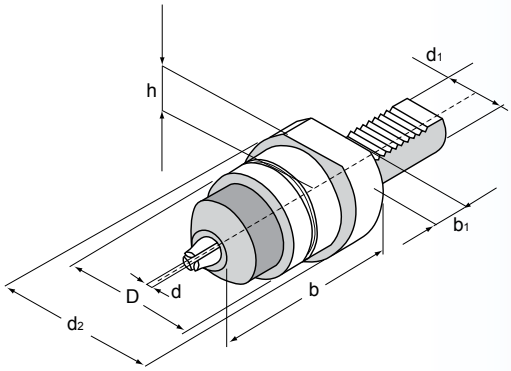


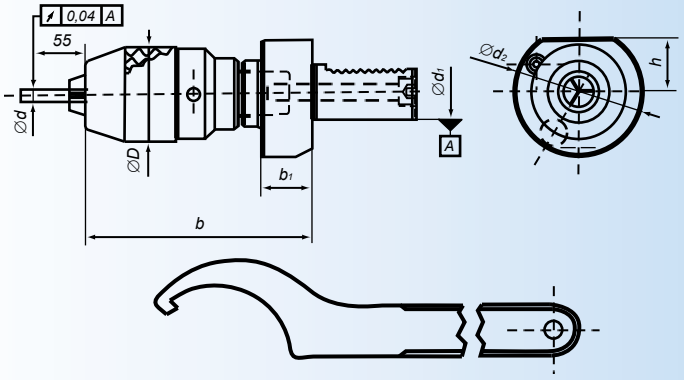


| Typ – wielkość<br>Type – Dimension | $d_1$ | d | D | $d_2$ | b | $b_1$ | h |
|---|---|---|---|---|---|---|---|
| **VDI30.13UW** | 30 | 6-13 | 50 | 68 | 118,5 | 27 | 28 |
| **VDI30.16UW** | 30 | 6-16 | 58 | 68 | 123,8 | 27 | 28 |
| **VDI40.13UW** | 40 | 6-13 | 50 | 83 | 103,9 | 22 | 32,5 |
| **VDI40.16UW** | 40 | 6-16 | 58 | 83 | 108,8 | 22 | 32,5 |

**Krótki uchwyt wiertarski/**
**Integral shank drill chucks**

**łacznie z uchwytem/ with drill chuck**

## Typ 1275

DO MOCOWANIA UCHWYTÓW WIERTARSKICH
DRILL CHUCK ARBOR

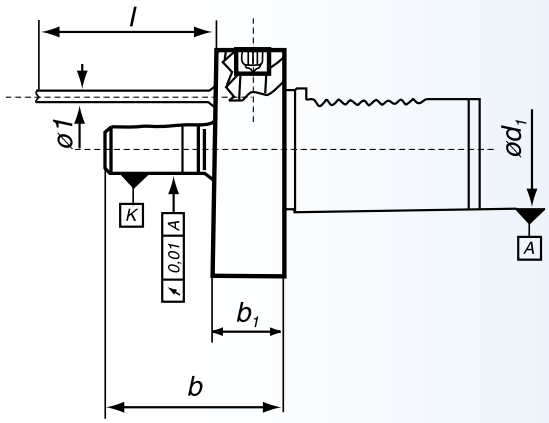


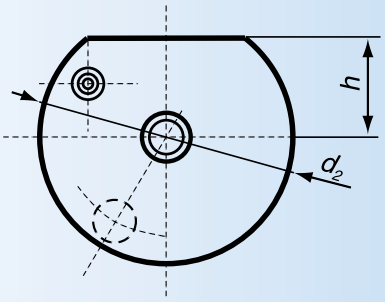


| Typ – wielkość<br>Type – Dimension | $d_1$ | K | $d_2$ | b | $b_1$ | h |
|---|---|---|---|---|---|---|
| **VDI30.B16** | 30 | B16 | 68 | 56 | 22 | 28 |
| **VDI40. B16** | 40 | B16 | 83 | 56 | 22 | 32,5 |

**bez uchwytu/without drill chuck**

## Typ 1226

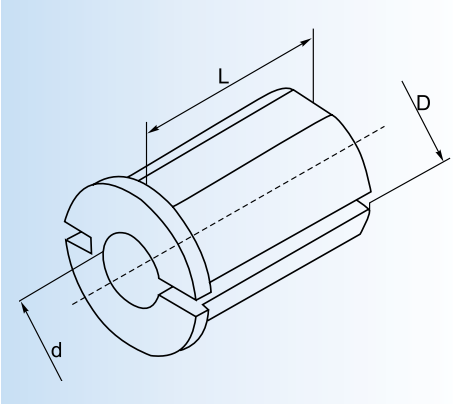


REDUKCJE TYPÓW CYLINDRYCZNYCH
BUSHINGS FOR TOOLHOLDERS FOR BORING BARS
for tools with cylindrical shanks

| Typ – wielkość<br>Type – Dimension | D | d | L |
|---|---|---|---|
| **RW.D20.D08K** | 20 | 8 | 50 |
| **RW.D20.D10K** | 20 | 10 | 50 |
| **RW.D20.D12K** | 20 | 12 | 50 |
| **RW.D20.D08L** | 20 | 8 | 60 |
| **RW.D20.D10L** | 20 | 10 | 60 |
| **RW.D20.D12L** | 20 | 12 | 60 |
| **RW.D25.D08K** | 25 | 8 | 50 |
| **RW.D25.D10K** | 25 | 10 | 50 |
| **RW.D25.D12K** | 25 | 12 | 50 |
| **RW.D25.D16K** | 25 | 16 | 50 |
| **RW.D25.D08L** | 25 | 8 | 60 |
| **RW.D25.D10L** | 25 | 10 | 60 |
| **RW.D25.D12L** | 25 | 12 | 60 |
| **RW.D25.D16L** | 25 | 16 | 60 |
| **RW.D25.D12LX** | 25 | 12 | 75 |
| **RW.D25.D16LX** | 25 | 16 | 75 |
| **RW.D32.D08K** | 32 | 8 | 60 |
| **RW.D32.D10K** | 32 | 10 | 60 |
| **RW.D32.D12K** | 32 | 12 | 60 |
| **RW.D32.D16K** | 32 | 16 | 60 |
| **RW.D32.D20K** | 32 | 20 | 60 |
| **RW.D32.D25K** | 32 | 25 | 60 |
| **RW.D32.D12L** | 32 | 12 | 75 |
| **RW.D32.D16L** | 32 | 16 | 75 |
| **RW.D32.D20L** | 32 | 20 | 75 |
| **RW.D32.D25L** | 32 | 25 | 75 |
| **RW.D40.D12** | 40 | 12 | 75 |
| **RW.D40.D16** | 40 | 16 | 75 |
| **RW.D40.D20** | 40 | 20 | 75 |
| **RW.D40.D25** | 40 | 25 | 75 |
| **RW.D40.D32** | 40 | 32 | 75 |
| **RW.D50.D12** | 50 | 12 | 75 |
| **RW.D50.D16** | 50 | 16 | 75 |
| **RW.D50.D20** | 50 | 20 | 75 |
| **RW.D50.D25** | 50 | 25 | 75 |
| **RW.D50.D32** | 50 | 32 | 75 |
| **RW.D50.D40** | 50 | 40 | 75 |

## Typ 1228

REDUKCJA CHWYTU CYLINDRYCZNEGO do narzędzi z CHWYTEM MORSE'A
FOR TOOLHOLDERS FOR BORING BARS for tools with Morse taper shank

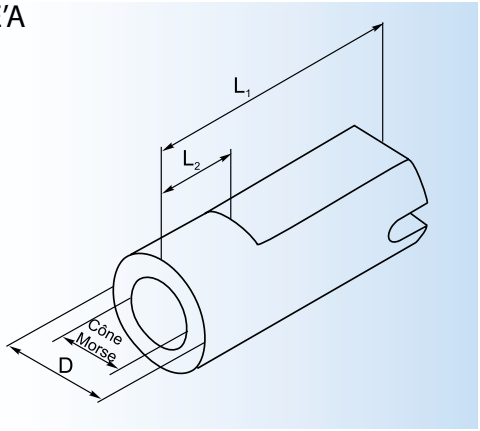


| Typ – wielkość<br>Type – Dimension | D | MK | $L_1$ | $L_2$ |
|---|---|---|---|---|
| **RMK.D40.MK2** | 40 | 2 | 95 | 30 |
| **RMK.D40.MK3** | 40 | 3 | 95 | 30 |
| **RMK.D40.MK4** | 40 | 4 | 118 | 55 |

## Typ 1248

REDUKCJA CHWYTU CYLINDRYCZNEGO do narzędzi z CHWYTEM CYLINDRYCZNYM
FOR TOOLHOLDERS FOR BORING BARS for tools with cylindrical shanks with flat

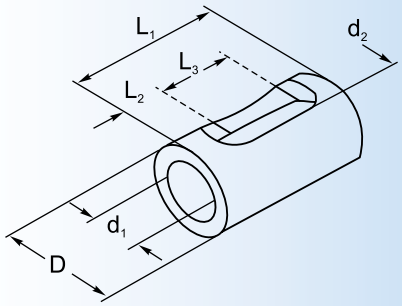


| Typ – wielkość<br>Type – Dimension | D | $d_1$ | $d_2$ | $L_1$ | $L_2$ | $L_3$ |
|---|---|---|---|---|---|---|
| **RD.D32.D12** | 32 | 12 | 13 | 60 | 15 | 30 |
| **RD.D32.D16** | 32 | 16 | 13 | 60 | 15 | 30 |
| **RD.D32.D20** | 32 | 20 | 13 | 60 | 15 | 30 |
| **RD.D32.D25** | 32 | 25 | 13 | 60 | 15 | 30 |

## Typ 1249

REDUKCJA CHWYTU CYLINDRYCZNEGO do narzędzi z CHWYTEM WELDONA
FOR TOOLHOLDERS FOR BORING BARS for tools with cylindrical shanks Weldon type

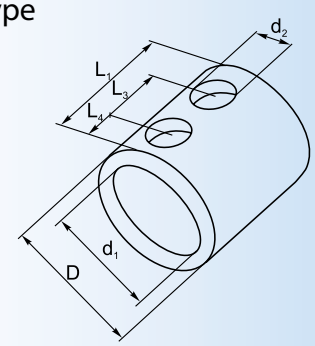


| Typ – wielkość<br>Type – Dimension | D | $d_1$ | $d_2$ | $L_1$ | $L_3$ | $L_4$ |
|---|---|---|---|---|---|---|
| **RWE.D20.D08** | 20 | 8 | 11 | 48 | 20 | 14 |
| **RWE.D20.D10** | 20 | 10 | 11 | 48 | 20 | 14 |
| **RWE.D20.D12** | 20 | 12 | 11 | 48 | 20 | 14 |
| **RWE.D20.D16** | 20 | 16 | 11 | 48 | 20 | 14 |
| **RWE.D25.D05** | 25 | 5 | 13 | 55 | 23 | 16 |
| **RWE.D25.D08** | 25 | 8 | 13 | 55 | 23 | 16 |
| **RWE.D25.D10** | 25 | 10 | 13 | 55 | 23 | 16 |
| **RWE.D25.D12** | 25 | 12 | 13 | 55 | 23 | 16 |
| **RWE.D25.D16** | 25 | 16 | 13 | 55 | 23 | 16 |
| **RWE.D25.D18** | 25 | 18 | 13 | 55 | 23 | 16 |
| **RWE.D25.D20** | 25 | 20 | 13 | 55 | 23 | 16 |

## TYP 7711S

| MK | Collet/Tulejka | Range/Zakres | Kod/Code | Cena netto |
|---|---|---|---|---|
| **2** | ER25 | 3-16 | MK2.A70.ER25WTR | 220,00 |

## OPRAWKA DO TULEJEK ER32 – „SHORTY"
## STUBBY COLLET CHUCK ER32

## TYP 7617

| 7:24 | ER | A | Range/Zakres | Kod/Code | Cena netto |
|---|---|---|---|---|---|
| 40 | ER32 | 20 | 3-20 | DIN40.A20.ER32 | 145,00 |
| 40 | ER32 | 20 | 3-20 | BT40.A20.ER32 | 145,00 |

NA INDYWIDUALNE ZAMÓWIENIE KLIENTA OFERUJEMY NAPĘDZANE OPRAWKI VDI.

Szczegóły do ustalenia z Działem Handlowym lub z przedstawicielami terenowymi.

# PRECYZYJNE UCHWYTY TOKARSKIE Z MOCOWANIEM RĘCZNYM

**UCHWYTY z MOCOWANIEM BEZPOŚREDNIM**
**według DIN 55026/ DIN 55027/ 55029**
DOSTĘPNE W PEŁNEJ GAMIE ROZMIAROWEJ
oraz
**UCHWYTY O DUŻYCH WYMIARACH – 800 mm, 1000 mm, 1250 mm**
DOSTĘPNE W RÓŻNYCH OPCJACH RODZAJU UCHWYTU
Z RÓŻNYM SYSTEMEM MOCOWANIA

- Uniwersalne uchwyty samocentrujące przeznaczone są do mocowania na tokarkach, stołach obrotowych, frezarkach
- Uchwyty dostarczane sa ze szczękami jednolitymi twardymi wewnętrznymi i zewnętrznymi
- Mocowanie płaskie, DIN 6350
- Korpus wykonany jest z żeliwa wysokiej jakości. Prowadnice szczęk i wszystkie pozostałe powierzchnie pracujące są precyzyjnie obrabiane
- Kuta tarcza zębata wykonana jest ze stali stopowej wysokiej jakości. Hartowana i precyzyjnie szlifowana
- Szczęki wykonane ze stali stopowej wysokiej jakości – hartowane i precyzyjnie szlifowane
- Kółka zębate są hartowane i szlifowane

- Universal adjustable scroll chucks can be used for all machining operations where universal chucks are used
- Chucks are provided both with outside and inside solid jaws
- Flat mounting, DIN 6350
- Chuck body is made of high quality cast iron. Jaw guides are fully hardened and ground.
- Jaws are made of high quality steel – hardened and ground
- Forged scroll is constructed of high quality steel. Hardened and precisely ground
- Pinions are hardened and ground

Mocowanie płaskie/ Flat mounting

## UCHWYTY A3204

| Średnica uchwytu/ Chuck diameter | Średnica otworu/ Bore diameter | Obroty max.\ Max Speed [r.p.m.] | Masa kg/ Weight [kg] | Kod/Code |
|---|---|---|---|---|
| 80 | 16 | 4000 | 1.5 | A/3204/80 |
| 100 | 20 | 3500 | 2.8 | A/3204/100 |
| 125 | 31 | 3200 | 5.0 | A/3204/125 |
| 160 | 41 | 3000 | 10.0 | A/3204/160 |
| 200 | 54 | 2500 | 17.5 | A/3204/200 |
| 250 | 75 | 2000 | 29 | A/3204/250 |
| 315 | 101 | 1500 | 50 | A/3204/315 |
| 400 | 134 | 1000 | 85 | A/3204/400 |
| 500 | 195 | 700 | 145 | A/3204/500 |
| 630 | 256 | 500 | 250 | A/3204/630 |

**Wyposażenie uchwytów:**
- komplet szczęk wewnętrznych
- komplet szczęk zewnętrznych
- klucz
- komplet śrub mocujących
- klucz sześciokątny
- instrukcja obsługi
- certyfikat jakości

**Chuck equipment**:
- set of hard solid inside jaws
- set of hard solid outside jaws
- chuck wrench
- set of mounting screws
- hex key
- manual
- quality certificate

## UCHWYTY A3604

| Średnica uchwytu/ Chuck diameter | Średnica otworu/ Bore diameter | Obroty max.\ Max Speed [r.p.m.] | Masa kg/ Weight [kg] | Kod/Code |
|---|---|---|---|---|
| 125 | 31 | 3200 | 5.0 | A/3604/125 |
| 160 | 41 | 3000 | 10.0 | A/3604/160 |
| 200 | 54 | 2500 | 17.5 | A/3604/200 |
| 250 | 75 | 2000 | 29 | A/3604/250 |
| 315 | 101 | 1500 | 50 | A/3604/315 |
| 400 | 134 | 1000 | 85 | A/3604/400 |
| 500 | 195 | 700 | 145 | A/3604/500 |
| 630 | 256 | 500 | 250 | A/3604/630 |

**Wyposażenie uchwytów:**
- komplet szczęk wewnętrznych
- komplet szczęk zewnętrznych
- klucz
- komplet śrub mocujących
- klucz sześciokątny
- instrukcja obsługi
- certyfikat jakości

**Chuck equipment**:
- set of hard solid inside jaws
- set of hard solid outside jaws
- chuck wrench
- set of mounting screws
- hex key
- manual
- quality certificate

## MOCOWANIE DIN 6350

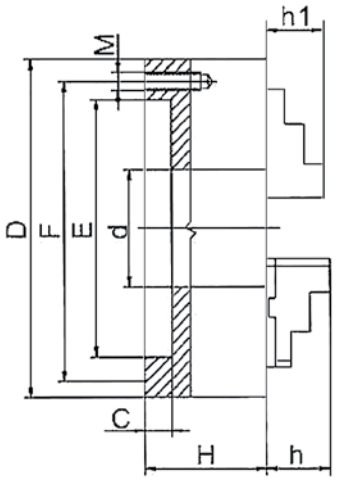


## PODSTAWOWE WYMIARY/ MAIN DIMENSIONS

| Średnica uchwytu/ Chuck diameter D | F | E H7 | d | C | H | h | h1 | Śruby mocujące/ Mounting bolts | | |
|---|---|---|---|---|---|---|---|---|---|---|
| | | | | | | | | Gwint/ Thread M | L | Ilość śrub/ Quantity |
| 80 | 67 | 56 | 16 | 3 | 43 | _ | 13 | M6x1 | 25 | 3 |
| 100 | 83 | 70 | 20 | 3 | 49 | _ | 17 | M8x1.25 | | |
| 125 | 108 | 95 | 31 | 4 | 55 | 39 | 20 | | | |
| 160 | 140 | 125 | 41 | 4 | 63 | 42 | 32 | M10x1.5 | | 6 |
| 200 | 176 | 160 | 54 | 4 | 74 | 44 | 29 | | | |
| 250 | 224 | 200 | 75 | 5 | 84 | 52 | 33 | M12x1.75 | 30 | |
| 315 | 286 | 260 | 101 | 5 | 93 | 56 | 42 | M16x2 | | |
| 400 | 362 | 330 | 134 | 5 | 103 | 67 | 54 | | 39 | |
| 500 | 458 | 420 | 195 | 6 | 113 | 88 | 55 | | | |
| 630 | 586 | 545 | 256 | 7 | 129 | 87 | 69 | | 49 | |

## CZĘŚCI ZAMIENNE/ SPARE PARTS

1. Korpus uchwytu/Chuck Body
2. Tylna pokrywa/Back cover
3. Tarcza spiralna/Scroll Plate
4. Kółko zębate/Pinion
5. Wkręt ustalający kółko zębate/ Pinion screw
6. Szczęki jednolite twarde zewnętrzne/ Hard solid outside jaws
7. Szczęki jednolite twarde wewnętrzne/ Hard solid inside jaws
8. Smarowniczka/Grease nipple
9. Śruby do mocowania uchwytu na zabieraku/ Chuck mounting bolts
10. Śruby mocujące tylna pokrywę/ Back cover mounting bolts
11. Klucz/Chuck Wrench

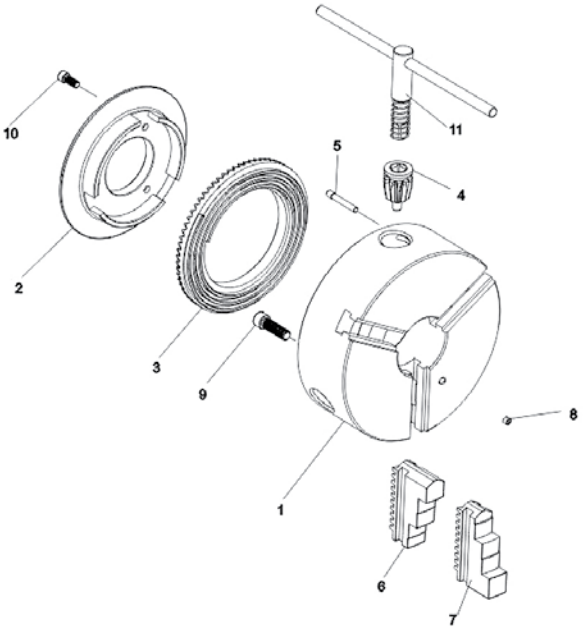


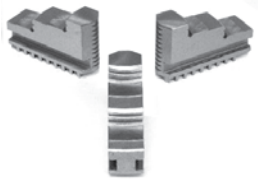

Szczęki zewnętrzne/
Outside Jaws

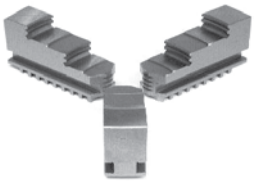

Szczęki wewnętrzne/
Inside Jaws

| Średnica uchwytu/ Chuck diameter | Tarcza spiralna/ Scroll plate | Kółko zębate/ Pinion | Klucz/ Chuck Wrench | Śruba kółka zeb./ Pinion bolt | Uchwyt 3-szczękowy/ 3 – Jaw Scroll Chuck | | Uchwyt 4-szczękowy/ 4 – Jaw Scroll Chuck | |
|---|---|---|---|---|---|---|---|---|
| | | | | | Szczęki wew./ Inside Jaws | Szczęki zew./ Outside Jaws | Szczęki wew./ Inside Jaws | Szczęki zew./ Outside Jaws |
| 80 | TS-80 | KZ-80 | K-80 | SKZ-80 | STW3-80 | STZ3-80 | - | - |
| 100 | TS-100 | KZ-100 | K-125 | SKZ -100 | STW3-100 | STZ3-100 | STW4-100 | STZ4-100 |
| 125 | TS-125 | KZ-125 | K-125 | SKZ -125 | STW3-125 | STZ3-125 | STW4-125 | STZ4-125 |
| 160 | TS-160 | KZ-160 | K-200 | SKZ -160 | STW3-160 | STZ3-160 | STW4-160 | STZ4-160 |
| 200 | TS-200 | KZ-200 | K-200 | SKZ -200 | STW3-200 | STZ3-200 | STW4-200 | STZ4-200 |
| 250 | TS-250 | KZ-250 | K-315 | SKZ -250 | STW3-250 | STZ3-250 | STW4-250 | STZ4-250 |
| 315 | TS-315 | KZ-315 | K-315 | SKZ -315 | STW3-315 | STZ3-315 | STW4-315 | STZ4-315 |
| 400 | TS-400 | KZ-400 | K-400 | SKZ -400 | STW3-400 | STZ3-400 | STW4-400 | STZ4-400 |
| 500 | TS-500 | KZ-500 | K-630 | SKZ -500 | STW3-500 | STZ3-500 | STW4-500 | STZ4-500 |
| 630 | TS-630 | KZ-630 | K-630 | SKZ -630 | STW3-630 | STZ3-630 | STW4-630 | STZ4-630 |

- Precyzyjne stalowe uchwyty samocentrujące przeznaczone do mocowania na tokarkach, stołach obrotowych, frezarkach.
- Uchwyty dostarczane są ze szczekami jednolitymi twardymi wewnętrznymi i zewnętrznymi.
- Mocowanie płaskie, DIN6350.
- Korpus wykonany jest z stali wysokiej jakości. Prowadnice szczęk i wszystkie pozostałe powierzchnie pracujące są precyzyjnie obrabiane.
- Kuta tarcza zębata wykonane jest ze stali stopowej wysokiej jakości. Hartowana i precyzyjnie szlifowana.
- Szczęki wykonane ze stali stopowej wysokiej jakości są hartowane i precyzyjnie szlifowane.
- **Kołka zębate są hartowane i szlifowane.**

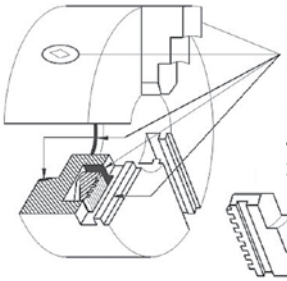

Powierzchnie hartowane i szlifowane

Hardened and Ground Surfaces

- Universal adjustable scroll chucks can be used for all machining operations where universal chucks are used
- Chucks are provided both with outside and inside solid jaws
- Flat mounting, DIN 6350
- Chuck body is made of high quality cast iron. Jaw guides are fully hardened and ground.
- Forged scroll is constructed of high quality steel. Hardened and precisely ground
- Jaws are made of high quality steel – hardened and ground
- **Pinions are hardened and ground**

## UCHWYTY A3504

**Wyposażenie uchwytów:**
- komplet szczęk wewnętrznych
- komplet szczęk zewnętrznych
- klucz
- komplet śrub mocujących
- klucz sześciokątny
- instrukcja obsługi
- certyfikat jakości

**Chuck equipment**:
- set of hard solid inside jaws
- set of hard solid outside jaws
- chuck wrench
- set of mounting screws
- hex key
- manual
- quality certificate

| Średnica uchwytu/ Chuck diameter | Obroty max./ Max Speed [r.p.m.] | Masa/ Weight [kg] | Kod/Code |
|---|---|---|---|
| 80 | 6000 | 1.5 | A/3504/80 |
| 100 | 5200 | 2.8 | A/3504/100 |
| 125 | 4800 | 5.0 | A/3504/125 |
| 160 | 4500 | 10.0 | A/3504/160 |
| 200 | 4000 | 17.5 | A/3504/200 |
| 250 | 3500 | 29 | A/3504/250 |
| 315 | 2800 | 50 | A/3504/315 |
| 400 | 2000 | 85 | A/3504/400 |
| 500 | 1200 | 145 | A/3504/500 |
| 630 | 1000 | 250 | A/3504/630 |

## UCHWYTY A3505

**Wyposażenie uchwytów:**
- komplet szczęk górnych twardych.
- komplet szczęk podstawowych.
- klucz.
- komplet śrub mocujących.
- klucz sześciokątny.
- instrukcja obsługi.
- certyfikat jakości.

**Chuck equipment:**
- set of hard solid inside jaws
- set of hard solid outside jaws
- chuck wrench
- set of mounting screws
- hex key
- manual

| Średnica uchwytu/ Chuck diameter | Obroty max./ Max Speed [r.p.m.] | Masa/ Weight [kg] | Kod/Code |
|---|---|---|---|
| 125 | 4800 | 5.0 | A/3505/125 |
| 160 | 4500 | 10.0 | A/3505/160 |
| 200 | 4000 | 17.5 | A/3505/200 |
| 250 | 3500 | 29 | A/3505/250 |
| 315 | 2800 | 50 | A/3505/315 |
| 400 | 2000 | 85 | A/3505/400 |
| 500 | 1200 | 145 | A/3505/500 |
| 630 | 1000 | 250 | A/3505/630 |

## PODSTAWOWE WYMIARY/ MAIN DIMENSIONS

## DIN 6350

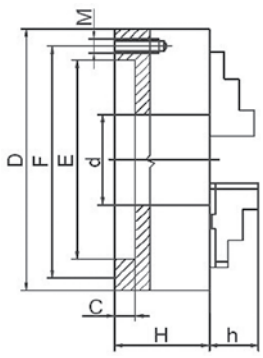


| Średnica uchwytu/ Chuck diameter D | F | E H7 | d | C | H | h | Śruby mocujące/ Mounting bolts | Ilość śrub w komplecie/ Quantity |
|---|---|---|---|---|---|---|---|---|
| | | | | | | | Gwint/ Thread M | |
| 80 | 67 | 56 | 16 | 3 | 44 | - | M6 | 3 |
| 100 | 83 | 70 | 20 | 3 | 50 | - | M8 | |
| 125 | 108 | 95 | 35.5 | 4 | 59.5 | 40 | | |
| 160 | 140 | 125 | 42 | 4 | 68 | 43 | M10 | 6 |
| 200 | 176 | 160 | 55 | 4 | 78 | 45 | | |
| 250 | 224 | 200 | 76 | 5 | 89 | 53 | M12 | |
| 315 | 286 | 260 | 103 | 5 | 96.2 | 57 | M16 | |
| 400 | 362 | 330 | 136 | 5 | 108 | 67 | | |
| 500 | 458 | 420 | 190 | 5 | 119 | 79 | | |
| 630 | 586 | 545 | 252 | 7 | 129 | 87 | | |

## CZĘŚCI ZAMIENNE/SPARE PARTS

1. Korpus uchwytu/Chuck body
2. Tylna pokrywa/Back cover
3. Tarcza spiralna/Scroll plate
4. Kółko zębate/Pinion
5. Pół pierścień/Pinion half ring
6. Tuleja kółka zębatego/Pinion sleeve
7. Szczęka podstawowa/Hard master jaws
8. Szczęka górna twarda/Hard top jaws
9. Smarowniczka/Grease nipple
11, 13. Śruby mocujące tylną pokrywę/Back cover mounting bolts
12. Kołek ustalający/Spindle locating pin
14. Klucz/Chuck wrench
15,16. Śruby mocujące szczęki/Hard top jaw mounting bolts
17, 10. Śruby mocujące uchwyt na zabieraku/Chuck mounting bolts
18. Klucz sześciokątny/Hex key

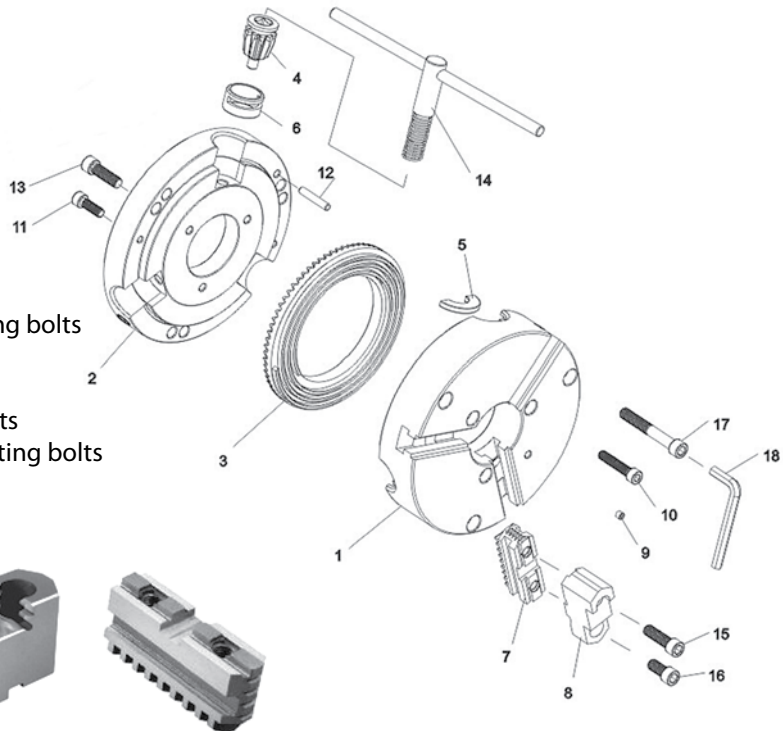


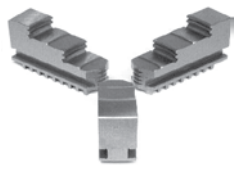
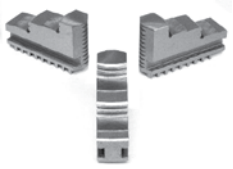

| Średnica uchwytu/ Chuck diameter | Tarcza spiralna/ Scroll plate | Kółko zębate/ Pinion | Klucz/ Wrench | Tuleja/ Pinion Sleeve | Pół pierścień/ Pinion half ring | Szczęki jednolite/ Solid jaws | | Szczęki dzielone/ Two-piece jaws | |
|---|---|---|---|---|---|---|---|---|---|
| | | | | | | Wewnętrzne/ Inside | Zewnętrzne/ Outside | Górna twarda/ Hard top | Podstawowa/ Master |
| 80 | TS -80 | KZ -80 | K-80 | - | SKZ-80* | STW3--80 | STZ3-80 | - | - |
| 100 | TS -100 | KZ -100 | K -125 | - | SKZ-100* | STW3--100 | STZ3-100 | - | - |
| 125 | TS -125 | KZ -125 | K -125 | TKZ-125 | DSKZ-125 | STW3--125 | STZ3-125 | STG/3-125 | SP/3-125 |
| 160 | TS -160 | KZ -160 | K -200 | TKZ -160 | DSKZ-160 | STW3--160 | STZ3-160 | STG/3-160 | SP/3-160 |
| 200 | TS -200 | KZ -200 | K -200 | TKZ -200 | DSKZ-200 | STW3--200 | STZ3-200 | STG/3-200 | SP/3-200 |
| 250 | TS -250 | KZ -250 | K -315 | TKZ -250 | DSKZ-250 | STW3--250 | STZ3-250 | STG/3-250 | SP/3-250 |
| 315 | TS -315 | KZ -315 | K -315 | TKZ -315 | DSKZ-315 | STW3--315 | STZ3-315 | STG/3-315 | SP/3-315 |
| 400 | TS -400 | KZ -400 | K -400 | TKZ -400 | DSKZ-400 | STW3-400 | STZ3-400 | STG/3-400 | SP/3-400 |
| 500 | TS -500 | KZ -500 | K -500 | TKZ -500 | DSKZ-500 | STW3--500 | STZ3-500 | STG/3-500 | SP/3-500 |
| 630 | TS -630 | KZ -630 | K -630 | TKZ -630 | DSKZ-630 | STW3--630 | STZ3-630 | STG/3-630 | SP/3-630 |

## DOKŁADNOŚĆ CENTROWANIA UCHWYTÓW SPIRALNYCH
## SELF-CENTERING SCROLL CHUCK ACCURANCY

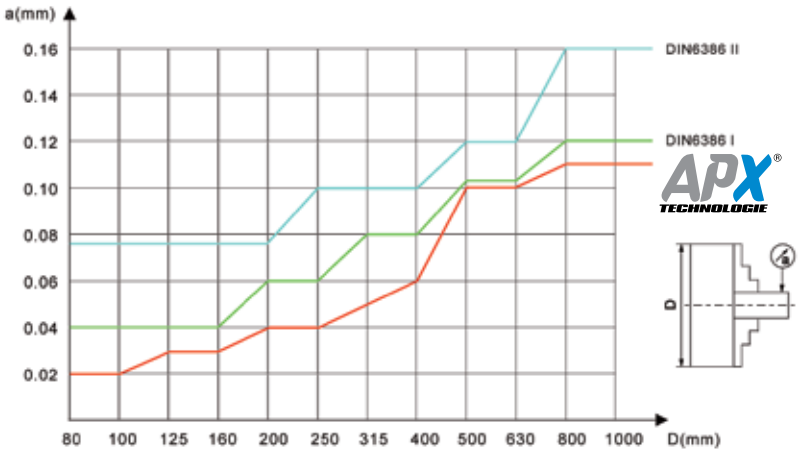

| Średnica uchwytu/ Chuck diameter | Stożek/ Cone | Kod/Code |
|---|---|---|
| 160 | A-5 | ZT-160/A5 |
| 200 | A-5 | ZT -200/A5 |
| 200 | A-6 | ZT -200/A6 |
| 250 | A-6 | ZT -250/A6 |
| 250 | A-8 | ZT -250/A8 |
| 315 | A-8 | ZT -315/A8 |

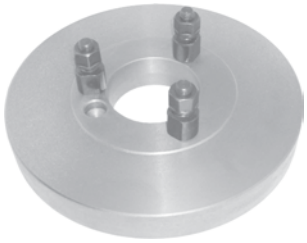

| Średnica uchwytu/ Chuck diameter | Stożek/ Cone | Kod/Code |
|---|---|---|
| 160 | C-5 | ZT -160/C5 |
| 200 | C-5 | ZT -200/C5 |
| 200 | C-6 | ZT -200/C6 |
| 250 | C-6 | ZT -250/C6 |
| 250 | C-8 | ZT -250/C8 |
| 315 | C-8 | ZT -315/C8 |

## 4-SZCZĘKOWE UCHWYTY TOKARSKIE Z NIEZALEŻNYM NASTAWIENIEM SZCZĘK Z KORPUSEM ŻELIWNYM O PODWYŻSZONEJ DOKŁADNOŚCI
## 4-JAW, INDEPENDENT CHUCKS WITH CAST IRON BODY AND HIGHER ACCURANCY

### UCHWYTY A4304 – Z NIEZALEŻNYM NASTAWIENIEM SZCZĘK
**Przeznaczone do obróbki średnio ciężkiej**
### CHUCKS 4304 – WITH INDEPENDENT ADJUSTMENT
**Designed for medium duty machining**

- Przeznaczone do obróbki średnio cieżkiej,
- Korpus wykonany z żeliwa o wysokiej jakości,
- Szczęki jednolite hartowane i szlifowane,
- Mocowanie płaskie,

- Designed for medium duty machining
- Chuck body is made of high quality cast iron
- Solid Jaws are hardened and ground
- Flat mounting

**Wyposażenie uchwytów:**
- komplet szczęk jednolitych.
- klucz.
- komplet śrub mocujacych.
- klucz sześciokątny.
- instrukcja obsługi.
- certyfikat jakości.

**Chuck equipment**:
- set of hard solid jaws
- chuck wrench
- set of mounting screws
- hex key
- manual
- quality certificate

### CZĘŚCI ZAMIENNE/ SPARE PARTS

| Średnica uchwytu/ chuck diameter | Szczęki jednolite 4-szt. kpl./ Solid-4 jaws set | Śruba pociągowa 1 szt./ Lead -screw | Obsada 1 szt./ Mounting | Klucz 1 szt./ Wrench |
|---|---|---|---|---|
| 80 | SJN-80 | SP-80 | OTB -80 | KS-80 |
| 100 | SJN -100 | SP-100 | OTB -100 | KS -100 |
| 125 | SJN -125 | SP-125 | OTB -125 | KS -125 |
| 160 | SJN -160 | SP-160 | OTB -160 | KS -160 |
| 200 | SJN -200 | SP-200 | OTB -200 | KS -250 |
| 250 | SJN -250 | SP-250 | OTB 250 | KS -250 |
| 315 | SJN -315 | SP-315 | OTB -315 | KS -400 |
| 400 | SJN -400 | SP-400 | OTB -400 | KS -400 |
| 500 | SJN -500 | SP-500 | OTB -500 | KS -630 |
| 630 | SJN -630 | SP--630 | OTB -630 | KS -630 |

### PODSTAWOWE WYMIARY/ MAIN DIMENSIONS

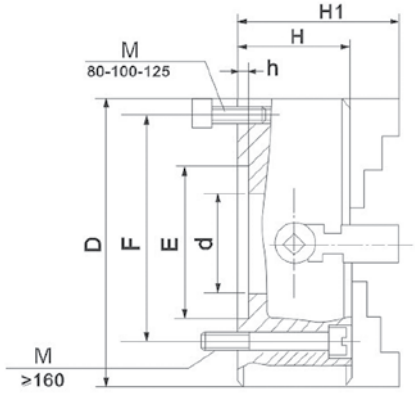


| Średnica uchwytu/ Chuck diameter D | E H7 | F | d | H | H1 | h | z - d | | Kod/Code |
|---|---|---|---|---|---|---|---|---|---|
| | | | | | | | Gwint/ Thread | Ilość/ Quantity | |
| 80 | 55 | 66 | 22 | 42 | 66 | 3.5 | M6 | 4 | A/4304/80 |
| 100 | 72 | 84 | 25 | 54 | 79 | 4 | M8 | 4 | A/4304/100 |
| 125 | 95 | 108 | 30 | 56 | 86 | 4.5 | M8 | 4 | A/4304/125 |
| 160 | 65 | 95 | 45 | 65 | 110 | 5 | M10 | 4 | A/4304/160 |
| 200 | 75 | 95 | 56 | 75 | 131 | 6 | M10 | 4 | A/4304/200 |
| 250 | 150 | 104.8 | 65 | 85 | 150 | 7 | M12 | 4 | A/4304/250 |
| 315 | 175 | 133.4 | 80 | 95 | 175 | 7 | M16 | 4 | A/4304/315 |
| 400 | 200 | 171.4 | 100 | 105 | 205 | 10 | M16 | 4 | A/4304/400 |
| 500 | 270 | 235 | 125 | 120 | 145 | 12 | M16 | 4 | A/4304/500 |
| 630 | 270 | 235 | 160 | 140 | 300 | 12 | M20 | 8 | A/4304/630 |